LOUISVILLE METRO PUBLIC WORKS STANDARD DRAWINGS

LOUISVILLE METRO PUBLIC WORKS
METRO DEVELOPMENT CENTER
444 S. FIFTH STREET, SUITE 400
LOUISVILLE, KY 40202
PHONE (502) 574-5810
FAX (502) 574-5924
www.louisvilleky.gov

JERRY E. ABRAMSON, MAYOR

JAMES C. ADKINS, DIRECTOR

LOUISVILLE METRO PUBLIC WORKS
STANDARD DRAWINGS

Louisville Metro Public Works
Metro Development Center

444 S. Fifth Street, Suite 400
Louisville, Kentucky 40202
Phone: 502.574.5810
Fax: 502.574.5924
www.louisvilleky.gov

TABLE OF CONTENTS

Drawing Name	Drawing No.
APPROACHES, ENTRANCES, AND DRIVEWAYS	**100**
Typical Subdivision Entrance	101
Commercial Entrance	102
Residential Driveway	103
Residential Circular Drives	104
Driveway Grades	105
CURBS, CURB CUTS, AND RAMPS	**200**
Curb Detail	201
Accessible Ramp	202
Accessible Parking Space Detail	203
DRAINAGE	**300**
Earth V-Ditch	301
Paved V-Ditch	302
Crushed Stone Encasement	303
Concrete Cap	304

Temporary Construction Entrance	305
Manhole and Catch Basin Adjustment Detail	306
Sidewalk Underdrain Detail	307
PAVEMENT / ROADWAY	**600**
Typical Roadway with Shoulder	601
Typical Roadway with Curb and Gutter	602
Cul-de-Sac with Operational Median	603
Roadway Widening Section	604
Pavement Restoration Detail	605
Bus Stop Concrete Pad	606
Edge Key Detail	607
SIDEWALK	**700**
Typical Concrete Sidewalk	701
Sidewalk Detail for Central Business District	702
Concrete Paver Detail – Concrete Base	703
Concrete Paver Detail– Aggregate Base	704
Bike Path – Pavement	705

KENTUCKY DEPARTMENT OF HIGHWAYS STND. DRAWINGS

Typical Guardrail Installations	RBI-001-09
Guardrail	RBI-002-06
Guardrail Terminal Sections	RBR-010-05
Guardrail Posts	RBR-015-04
Guardrail Posts	RBR-016-04
Guardrail End Treatment	RBR-020-02
Guardrail End Treatment Type 2A	RBR-025-03
Guardrail End Treatment Type 3	RBR-030-04
Guardrail End Treatment Type 4A	RBR-035-07
Guardrail End Treatment Type 7	RBR-050-04
Guardrail Components	RBR-005-10
Sloped Box Outlets Type I	RDB-100-04
Grates For Sloped Box Outlet	RDB-101-04
Sloped And Flared Box Inlet-Outlet	RDB-105-05
Grates For Sloped And Flared Inlet	RDB-106-04
Sloped Box Inlet Or Outlet Type I	RDB-110-07
Sloped Box Inlet Or Outlet Type 2	RDB-111-07
Paved Ditch Type I	RDD-001-05
Paved Ditch Type 2	RDD-002-06
Channel Lining Class IA	RDD-030-07
Channel Lining Class II And III	RDD-040-04
Fill Heights For Precast Reinforced Concrete Box Culverts	RDI-100-03

Bedding For Precast Box Culverts, Sewers, & Storm Drains	RDI-120-03
Slotted Drain Pipe	RDI-200-04
Perforated Pipe Types And Cover Heights	RDP-001-05
Perforated Pipe For Subgrade Drainage	RDP-005-04
Perforated Pipe Underdrains	RDP-006-03
Perforated Pipe Details (Solid Rock)	RDP-007-03
Perforated Pipe Headwalls	RDP-010-07
Precast Box Culvert Extension	RDX-300-03
Curve Widening & Superelevation Transitions	RGS-001-06
Right Of Way Markers	RGX-010-03
Typical Embankment Foundation Benches	RGX-010-03
Standard Barrier Median	RPM-010-05
Mountable Median	RPM-011-05
Mountable Median Type 6A	RPM-012-03
Mountable Median Type 7A	RPM-0151-03

MSD STANDARD DRAWINGS

Standard Headwall	DH-01-00
Ell Headwall	DH-02-00
U-Shaped Headwall	DH-03-00
Single Curb Inlet	DI-01-00
Double Curb Inlet	DI-02-00
Precast Manhole – Type 1	GM-01-03

Precast Manhole – Type 2	GM-02-03
Precast Manhole – Type 3	GM-03-03
Manhole Channelization	GM-04-00
Watertight Manhole Frame and Lid	GM-06-00
Precast Concrete Collar	GM-07-00
Trapped Manhole or Catch Basin	GM-08-01

GENERAL NOTES

1. The following standard drawings are applicable to the extent permitted by other prevailing regulations such as the Metro Land Development Code (LDC), the American with Disabilities Act (ADA), The Louisville Metropolitan Sewer District, Kentucky Department of Highways, AASHTO, Manual of Uniform Traffic Control Devices (MUTCD), etc.
2. The Director of Metro Public Works, County Engineer, or their designees reserve the right to amend, interpret, or waive the requirements shown in these Standard Drawings as may be applicable to individual conditions.

APPROACHES, ENTRANCES, AND DRIVEWAYS

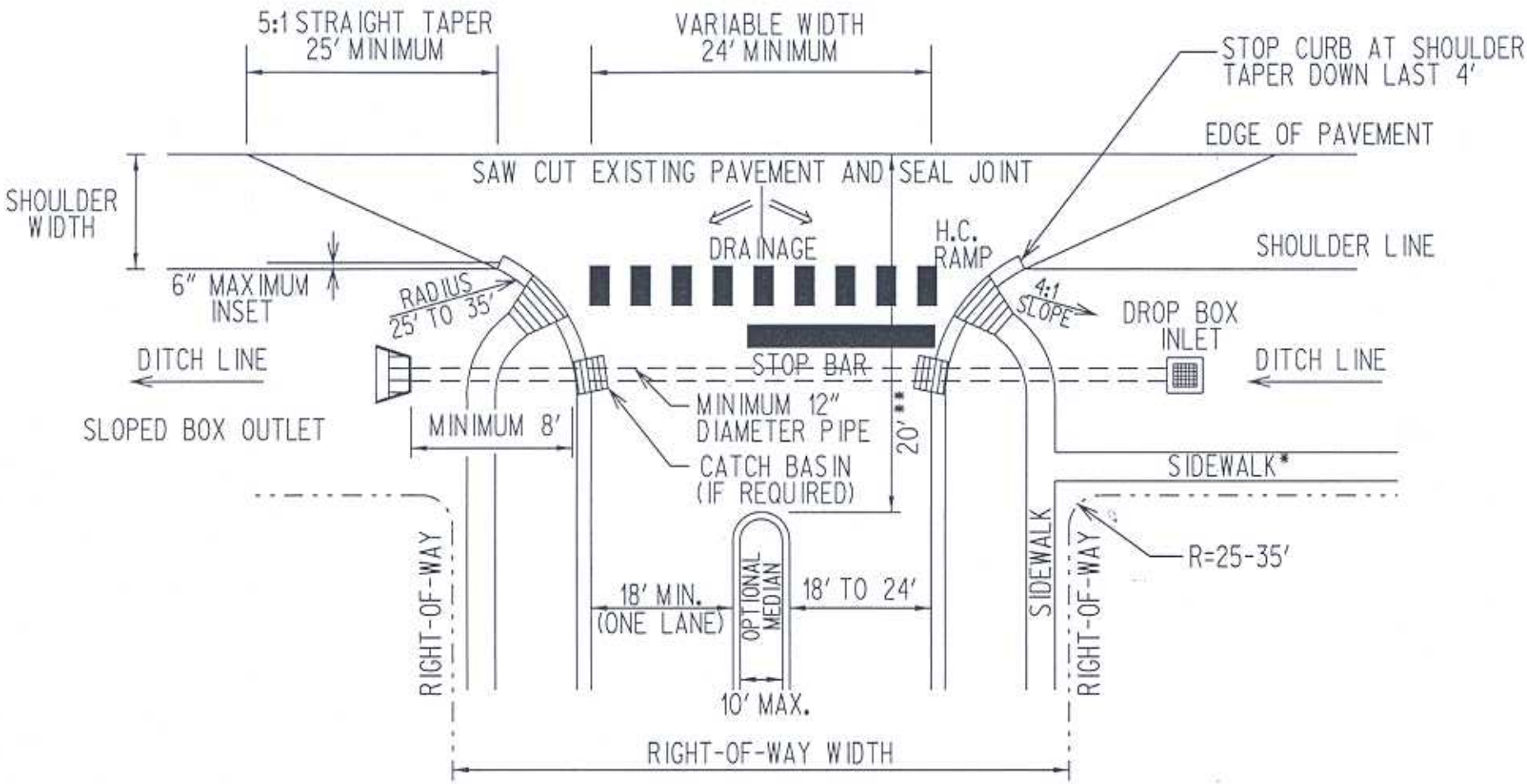

* WIDTH PER LAND DEVELOPMENT CODE

** TYPICALLY EVEN WITH RIGHT-OF-WAY, BUT NOT TO EXCEED 20' FROM EDGE OF PAVEMENT

LOUISVILLE METRO PUBLIC WORKS
444 5th Street, Louisville, Kentucky 40202

TYPICAL SUBDIVISION ENTRANCE	REVISIONS
Mark W. Adams 6/2/06	STANDARD DRAWING NO. 101
APPROVED BY: DATE	

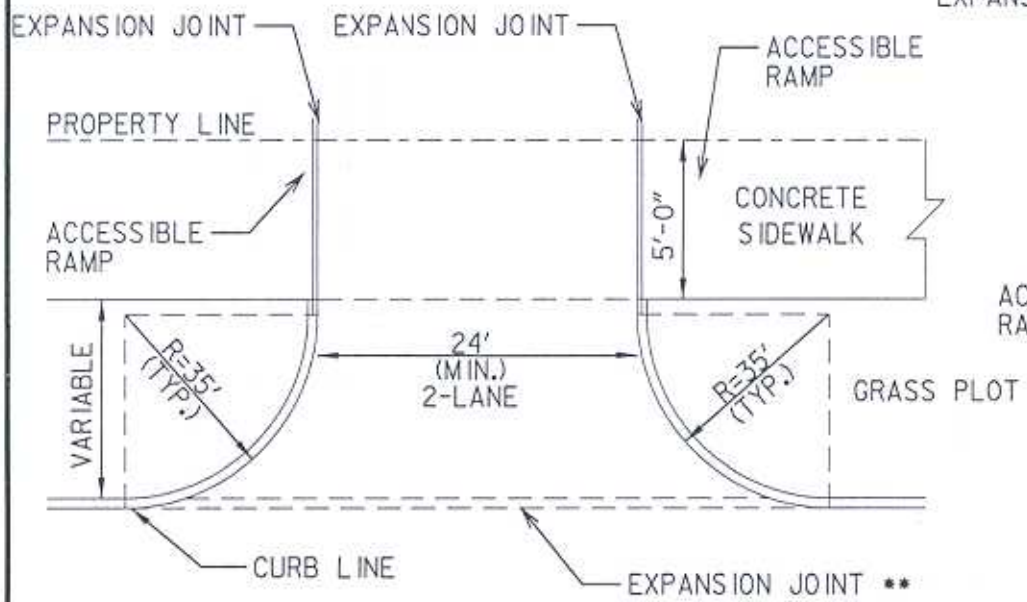

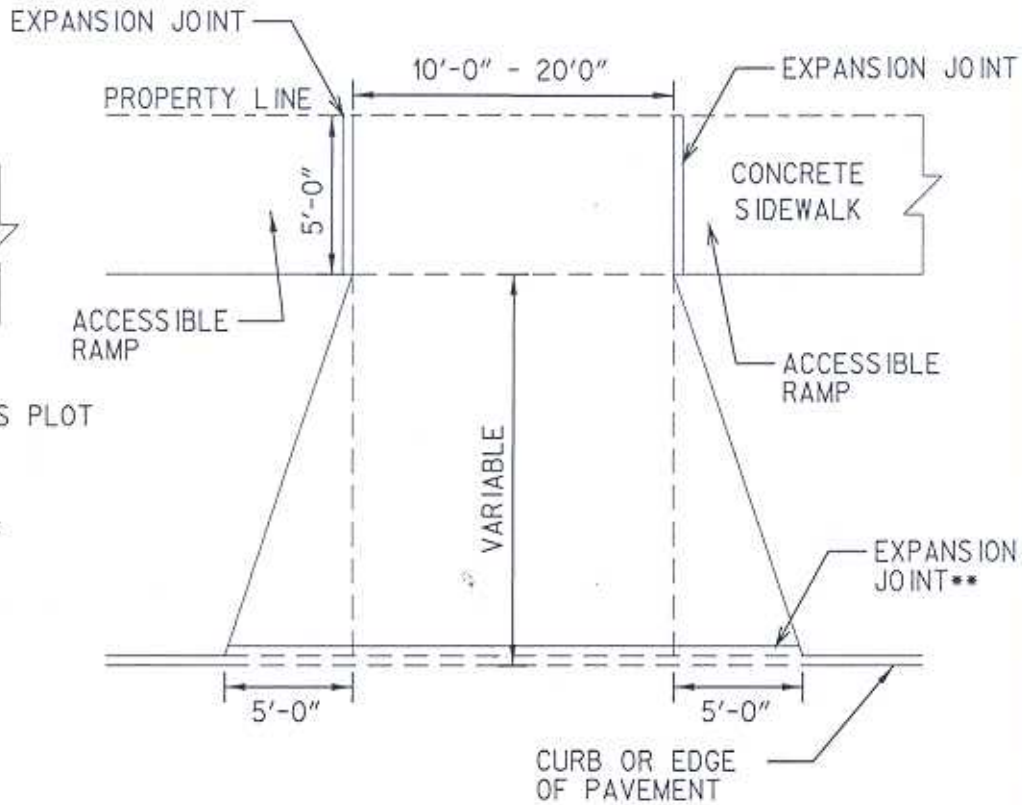

NOTES:

CONCRETE ENTRANCE:
CLASS "A" REINFORCED CONCRETE REQUIRED (3500 PSI)
6" MINIMUM DRIVEWAY THICKNESS

SEE METRO PUBLIC WORKS DETAIL 209 FOR MIN./MAX. SLOPE

EDGE OF ENTRANCE SHALL BE 30' FROM STREET INTERSECTIONS.

AASHTO SIGHT DISTANCE STANDARDS APPLY

* URBAN LOCATIONS MAY USE FLARE OR SMALLER RADIUS WITH METRO PUBLIC WORKS APROVAL

* SUBJECT TO FIELD CONDITIONS

** APPLICABLE ONLY IF CONCRETE PAVEMENT

LOUISVILLE METRO PUBLIC WORKS
444 5th Street, Louisville, Kentucky 40202

COMMERCIAL ENTRANCE

REVISIONS

Mark W. Adams 6/2/06
APPROVED BY: DATE

STANDARD DRAWING NO. 102

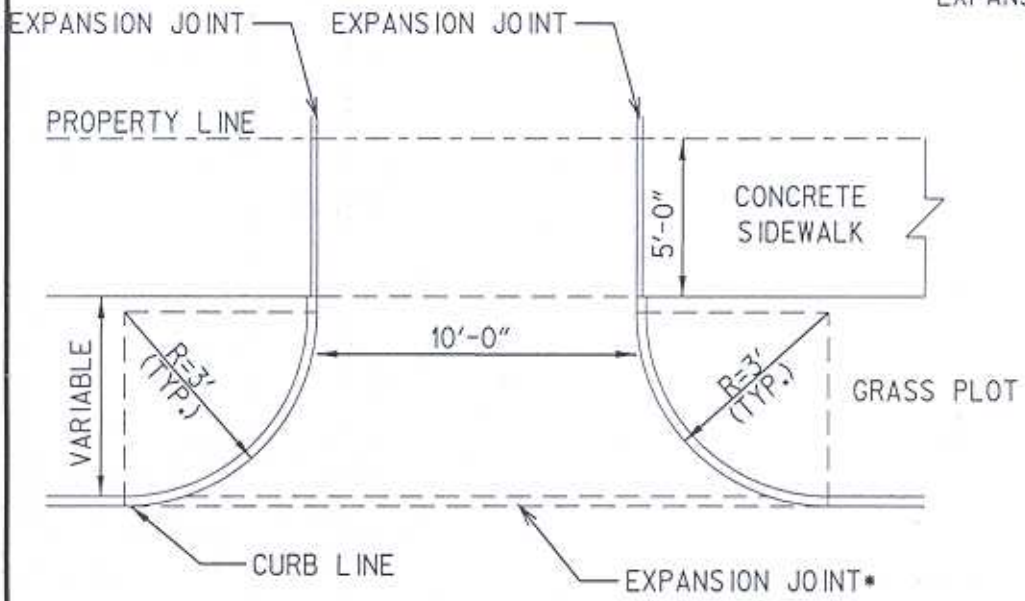

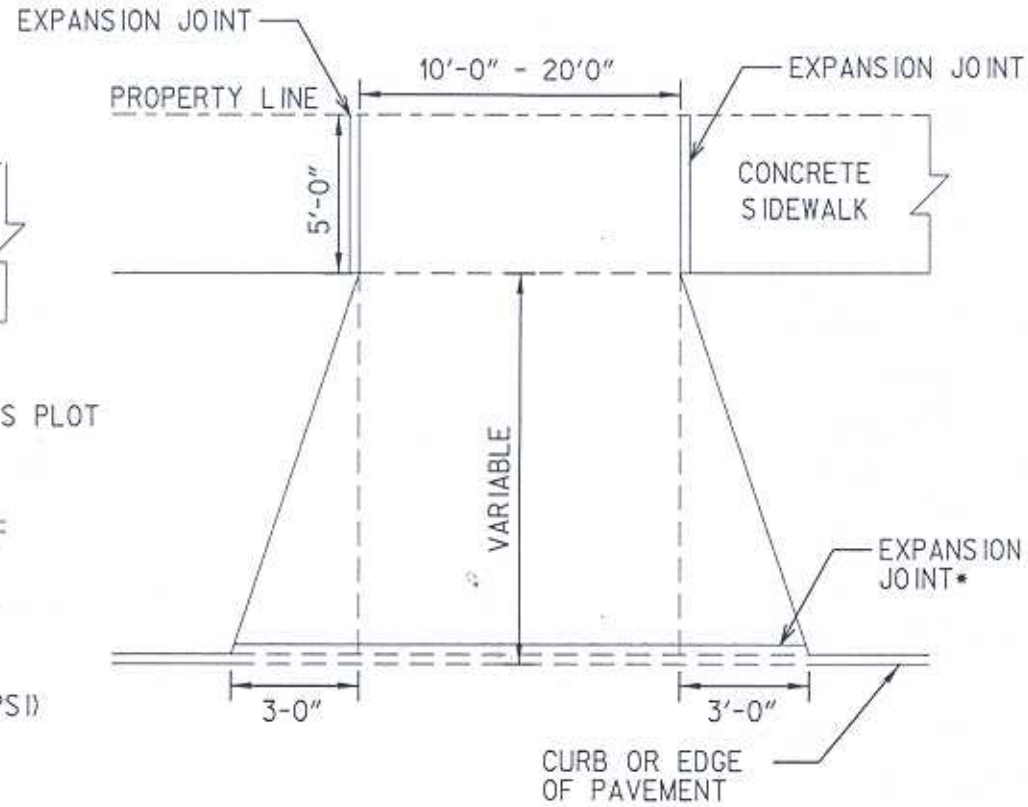

NOTES:

CLASS "A" REINFORCED CONCRETE REQUIRED (3500 PSI)
6" MINIMUM DRIVEWAY THICKNESS

ASPHALT:
3" ASPHALT (2" BINDER, 1" SURFACE)
10" STONE

SEE METRO PUBLIC WORKS DETAIL 210 FOR MIN./MAX. SLOPE

EDGE OF DRIVE SHALL BE 30' FROM STREET INTERSECTIONS

DRIVEWAY MUST BE PAVED FROM THE ROADWAY EDGE OF PAVEMENT TO THE RIGHT-OF-WAY / PROPERTY LINE

DRIVEWAY IN EXCESS OF 10' IN WIDTH WILL CONSIDER 3'-0" FLARE ON EACH SIDE AS A MINIMUM UNLESS OTHERWISE SPECIFIED BY THE ENGINEER

AASHTO SIGHT DISTANCE STANDARDS APPLY

SEE STATE STANDARDS FOR EXPANSION / CONTRACTION JOINT

* APPLICABLE ONLY IF CONCRETE PAVEMENT

LOUISVILLE METRO PUBLIC WORKS
444 5th Street, Louisville, Kentucky 40202

RESIDENTIAL DRIVEWAY

REVISIONS

APPROVED BY: Mark W. Adams DATE: 6/2/06

STANDARD DRAWING NO. 103

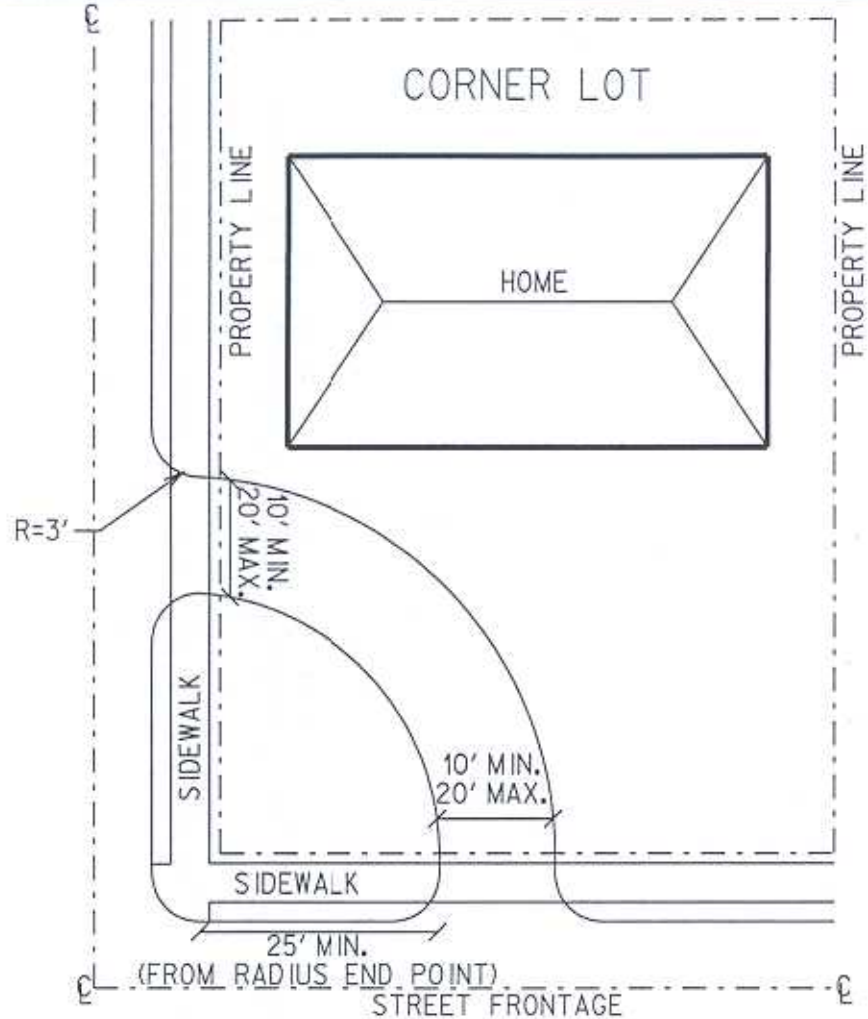

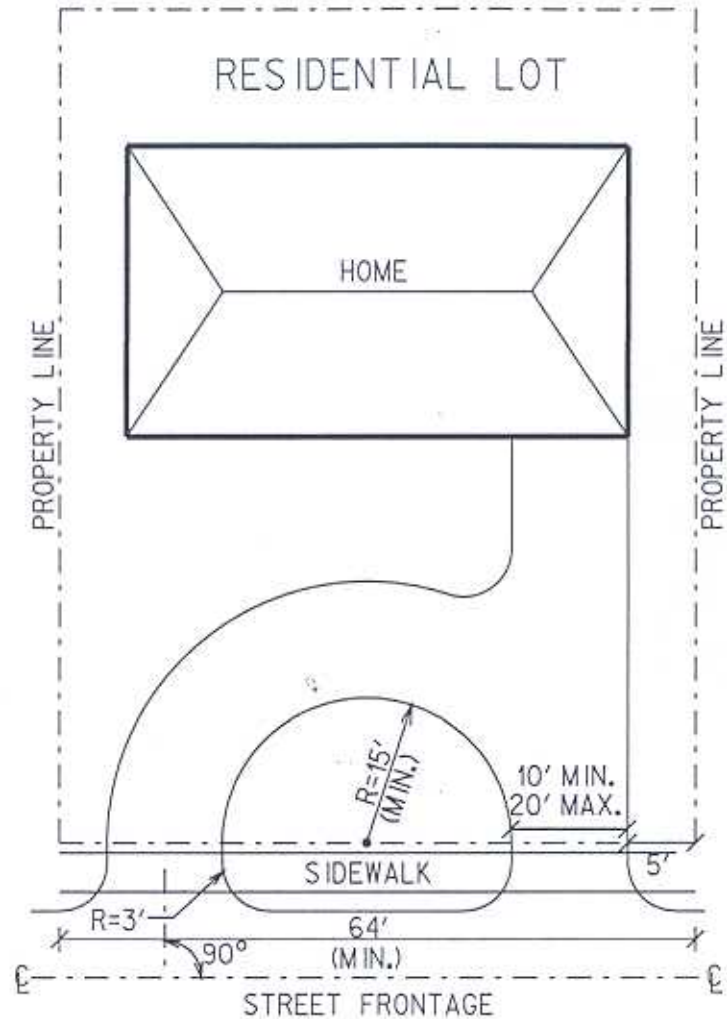

NOTES:

CENTER POINT OF INNER RADIUS (15' MIN.) SHALL NOT EXTEND PAST PROPERTY LINE.

CROSS SLOPE OF SIDEWALK NOT TO EXCEED 2% (SEE LOUISVILLE METRO WORKS STD. DWG. 701)

SEE METRO PUBLIC WORKS DETAIL 210 FOR MIN./MAX. SLOPE

CIRCULAR DRIVES ARE ONLY APPLICABLE FOR LOCAL ROADS (NOT MINOR OR MAJOR ARTERIAL ROADS, OR COLLECTOR ROADS)

LOUISVILLE METRO PUBLIC WORKS
444 5th Street, Louisville, Kentucky 40202

RESIDENTIAL CIRCULAR DRIVES

REVISIONS

Mark W. Adams 9/2/06
APPROVED BY: DATE

STANDARD DRAWING NO. 104

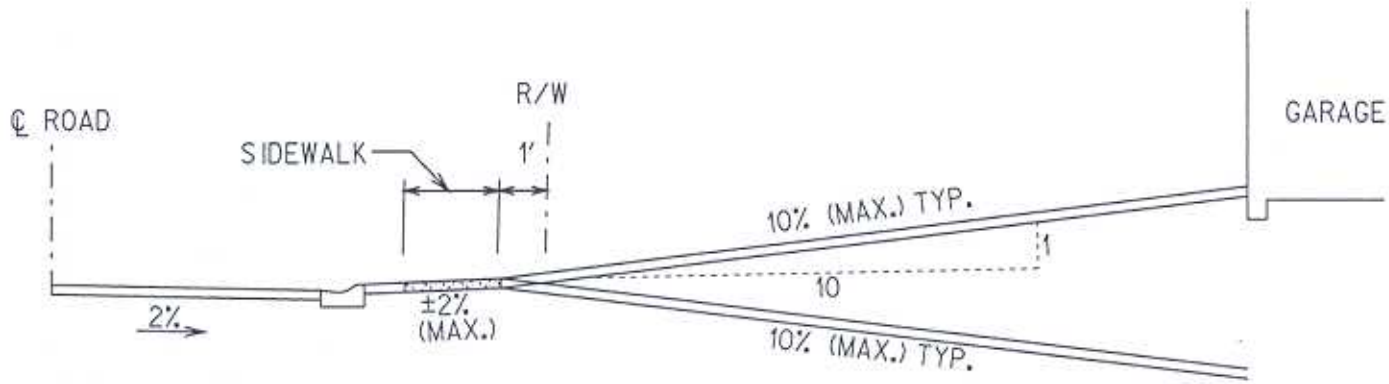

MAXIMUM DRIVEWAY GRADES

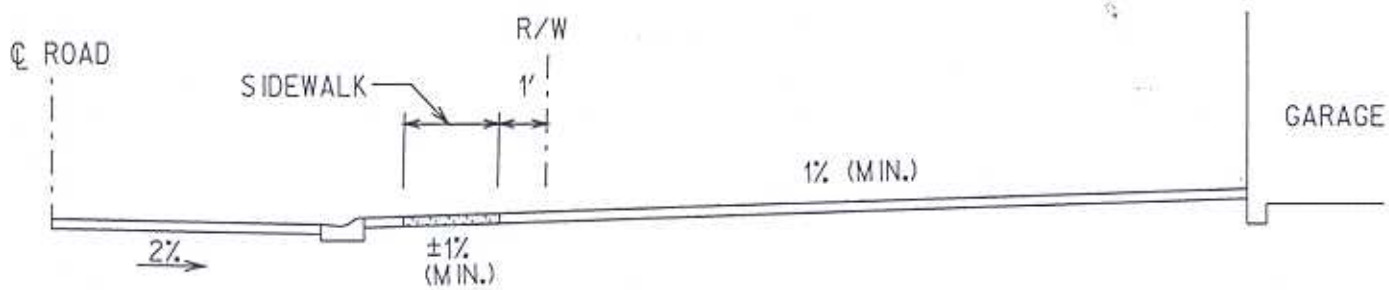

MINIMUM DRIVEWAY GRADES

NOTES:

CROSS SLOPE OF SIDEWALK NOT TO EXCEED 2% ACROSS DRIVEWAY.

LOUISVILLE METRO PUBLIC WORKS
444 5th Street, Louisville, Kentucky 40202

DRIVEWAY GRADES

REVISIONS

Mark W. Adams 6/2/06
APPROVED BY DATE

STANDARD DRAWING NO. 105

CURBS, CURB CUTS, AND RAMPS

* CLASS A REINFORCED CONCRETE APPLICABLE FOR ALL CURB DETAILS UNLESS OTHERWISE SPECIFIED

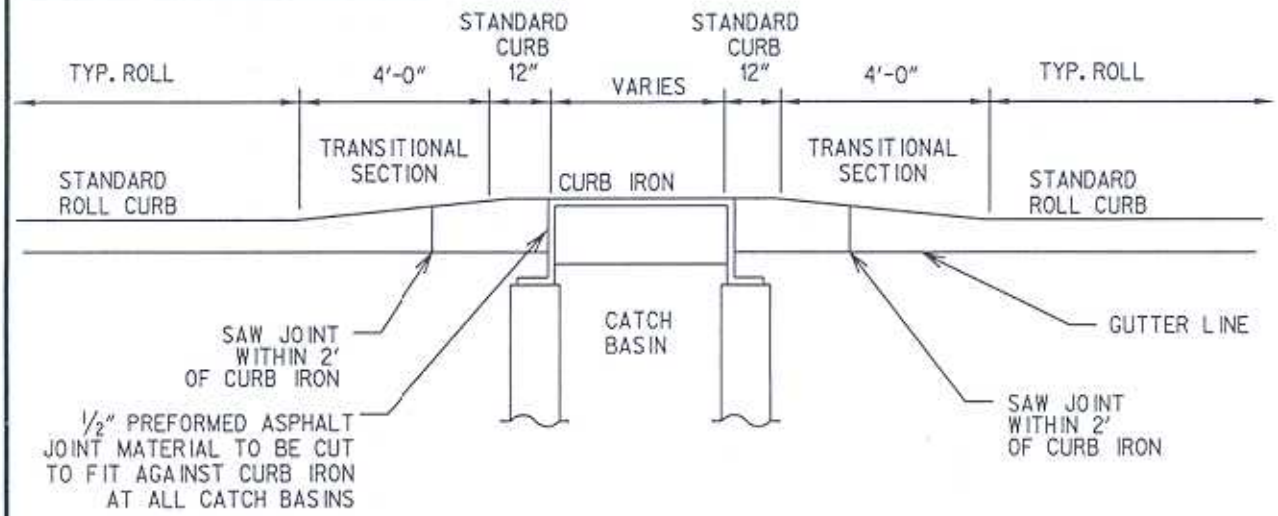

TRANSITIONAL CURB

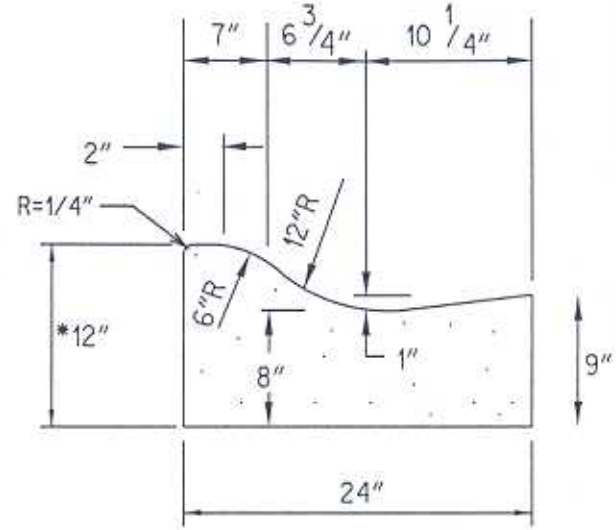

* 10" IN DEPRESSED LOCATIONS FOR HANDICAP ACCESS

ROLL CURB*

Transition from Roll Curb to Vertical Curb 5' each side of Catch Basin (See Transitional Curb Detail)

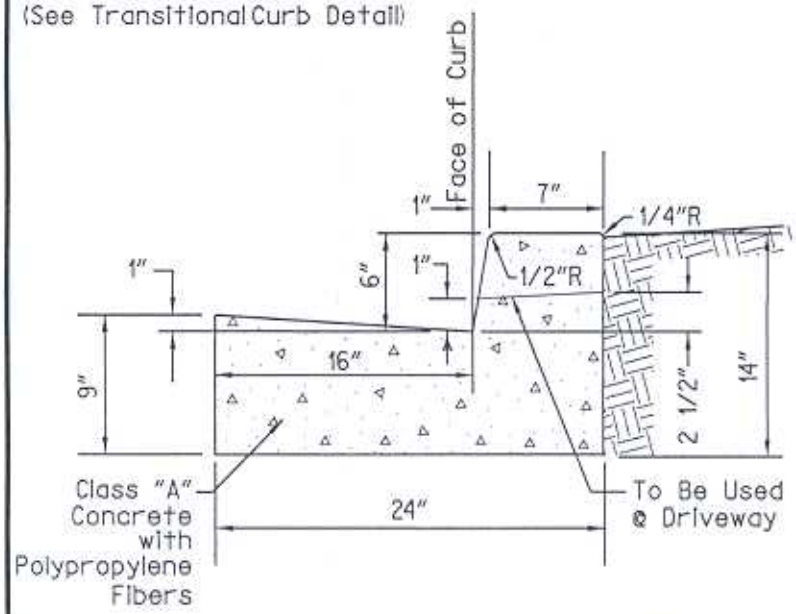

VERTICAL CURB AND GUTTER*

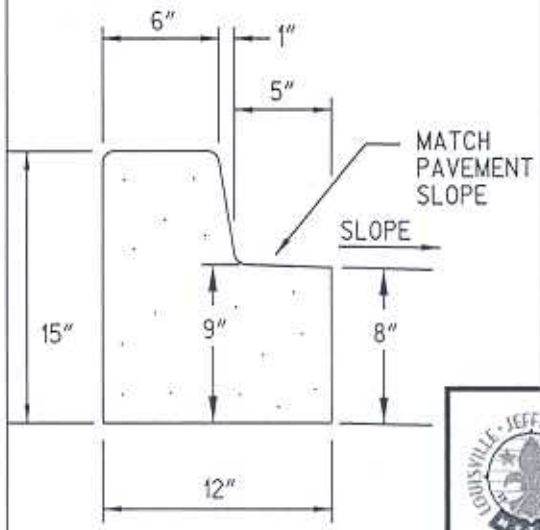

MEDIAN CURB*

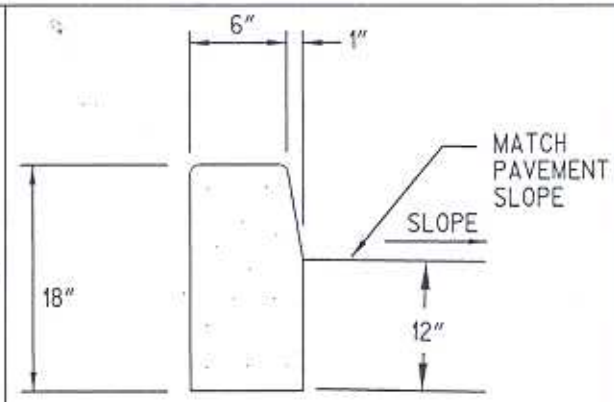

HEADER CURB*

LOUISVILLE METRO PUBLIC WORKS
444 5th Street, Louisville, Kentucky 40202

CURB DETAILS	REVISIONS
Mark W. Adams 6/2/06	STANDARD DRAWING NO. 201-1
APPROVED BY / DATE	1 OF 2

SAND-GROUT CONCRETE MIX DESIGN

MIX ID: 6-1/2 BAG GROUT - 4,000 PSI

WEIGHTS PER CUBIC YARD	(SATURATED SURFACE-DRY)	YIELD, CU. FT.
TYPE I PORTLAND CEMENT	630	3.21
CLASS F FLY ASH (LBS.)	10	0.70
CLASS A SAND (LBS.)	2729	17.02
WATER (GAL. LBS.)	295	4.73
TOTAL AIR (%)	5.0±1.0	1.35
		TOTAL 27.00 CU. FT.
ADD MIXTURE		
RUSS TECH, FINISHEASE NC (OZ.)	29.60	
AIR ENTRAIN		
RUSS TECH, RSA-10 (OZ.-US)	5.9	
WATER/CEMENT RATIO (LBS.)	0.40	
SLUMP (IN.)	4.00	
CONCRETE UNIT WEIGHT (LBS./CU. FT.)	139.4	

COMPENSATION FOR THE FREE AND NEGATIVE MOISTURE WILL BE MADE AT THE TIME OF BATCHING.

CONSTRUCTION TYPE: GENERAL
PLACEMENT: HANDS ON

THE KEY TO THE FINAL IS THE PRODUCT OF THE LIGHT SPRAY WASH (WATER) UNDERTAKEN AT THE PROPER TIME - A FIELD DECISION (NO RETARDENT)

SAMPLES PREPARED FOR WALKWAY AND CURB CONSTRUCTION WITH ST. JAMES COURT, LOUISVILLE, KENTUCKY.

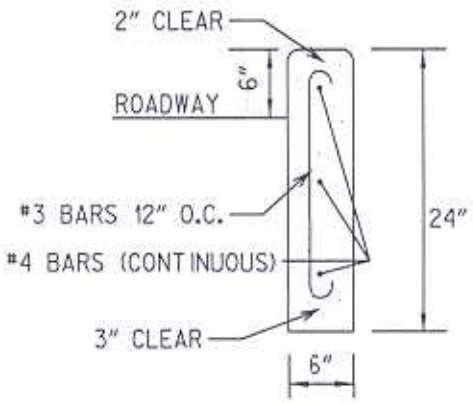

- ½" EXPANSION AT EACH 30' STOP STEEL AT ALL EXPANSION JOINT
- COLD JOINT EACH 10' (SAW)
- CAULK ALL JOINTS
- GREASED SMOOTH ½" STEEL ROD 12" LONG, 6" DOWN FROM TOP + 6" UP FROM BOTTOM SPANNING ALL EXPANSION JOINTS

SIMULATED LIMESTONE HEADER CURB

WHAT ARE THE MIX PROPORTIONS?
MIX PROPORTIONS WILL VARY DEPENDING ON LOCAL MATERIALS AND DESIRED STRENGTH REQUIREMENTS. SHOWN BELOW, AS EXAMPLE ONLY, ARE MIXES FROM THREE SOURCES:

AMERICAN CONCRETE PAVEMENT ASSOCIATION - "MUNICIPAL CONCRETE PAVEMENT MANUAL - GUIDE SPECIFICATIONS AND DESIGN STANDARDS. FLOWABLE LOW-STRENGTH MORTER BACKFILL"

QUANTITIES OF DRY MATERIALS PER CUBIC YARD

CEMENT	100 LBS.	SAND (SSD)	2800 LBS.
FLY ASH	250 LBS.	WATER (MAXIMUM)	500 LBS.

FINE AGGREGATE GRADATIONS•

SIEVE SIZE	% PASSING
¾	100
200	0-10

IOWA DEPARTMENT OF TRANSPORTATION - "SUPPLEMENTAL SPECIFICATIONS FOR FLOWABLE MORTER", SS 1053, JANUARY 19, 1988

QUANTITIES OF DRY MATERIALS PER CUBIC YARD

CEMENT	100 LBS.	FINE AGGREGATE	2600 LBS.
FLY ASH	300 LBS.	WATER (APPROX.)	70 GAL.

FINE AGGREGATE GRADATIONS•

SIEVE SIZE	% PASSING
¾	100
200	0-10

OHIO DEPARTMENT OF TRANSPORTATION - "LOW STRENGTH MORTER BACKFILL MATERIAL" PROPOSAL NOTE NO. 220, REV. NOVEMBER 3, 1987, CLASS LSM-100

TRIAL MIX PER CUBIC YARD

CEMENT	100 LBS.	SAND (SSD)	2580 LBS.
FLY ASH	250 LBS.	WATER (MAXIMUM)	500 LBS.

SAND GRADATION•

SIEVE SIZE	% PASSING
⅜ INCH	100
NO. 4	90-100
NO. 8	65-100
NO. 16	40-85
NO. 30	20-60
NO. 50	7-40
NO. 100	0-20
NO. 200	0-10

NOTE IT IS INTENDED THAT THE SAND BE A FINE SAND THAT WILL STAY IN SUSPENSION IN THE MIXTURE TO THE EXTENT REQUIRED TO OBTAIN A FLOWABLE CONSISTENCY.

LOUISVILLE METRO PUBLIC WORKS
444 5th Street, Louisville, Kentucky 40202

TRANSITIONAL CURB

REVISIONS

Mark W. Adams 6/2/06
APPROVED BY: DATE

STANDARD DRAWING NO. 201-2

2 OF 2

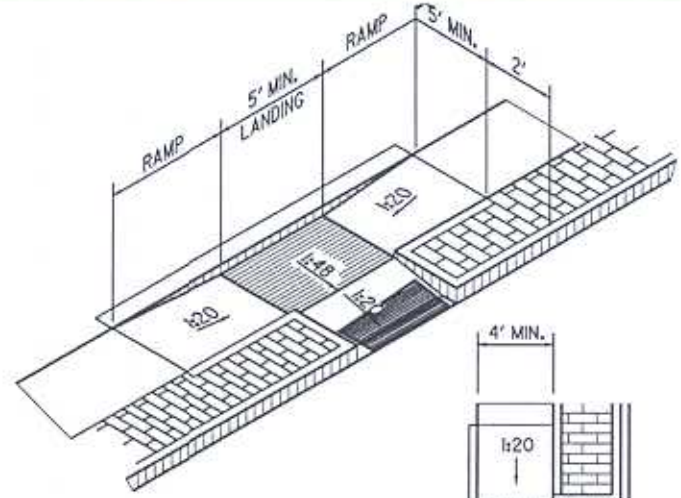

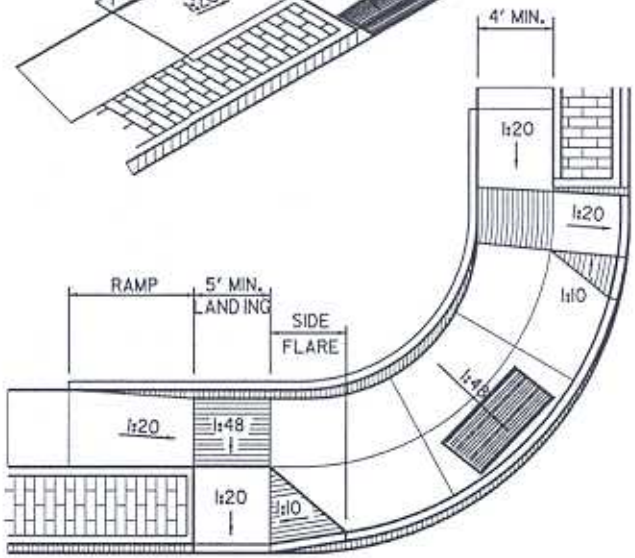

COMBINATION (PERPENDICULAR/ PARALLEL) CURB RAMPS

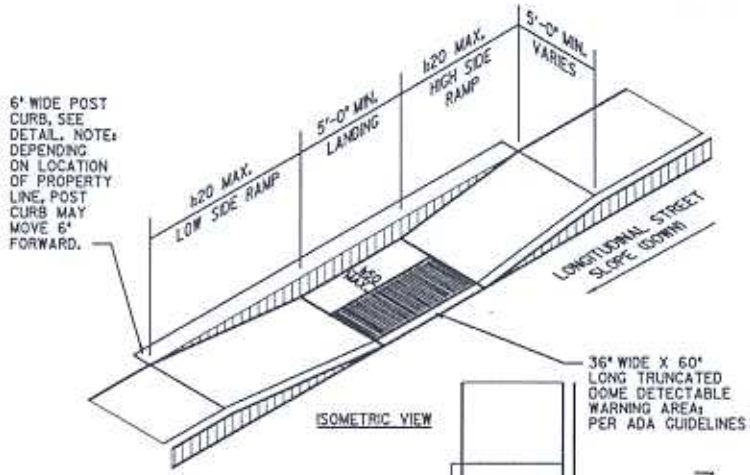

PARALLEL CURB RAMP

STREET SLOPE	REQUIRED MINIMUM RAMP LENGTH	
	LOW SIDE	HIGH SIDE
1%	5'-6"	7'-2"
2%	5'-0"	8'-4"
3%	4'-6"	10'-0"
4%	4'-2"	12'-6"
5%	3'-0"	16-8"

NOTE: SLOPE ON LANDING SHALL NOT EXCEED 2.0% IN ANY DIRECTION.

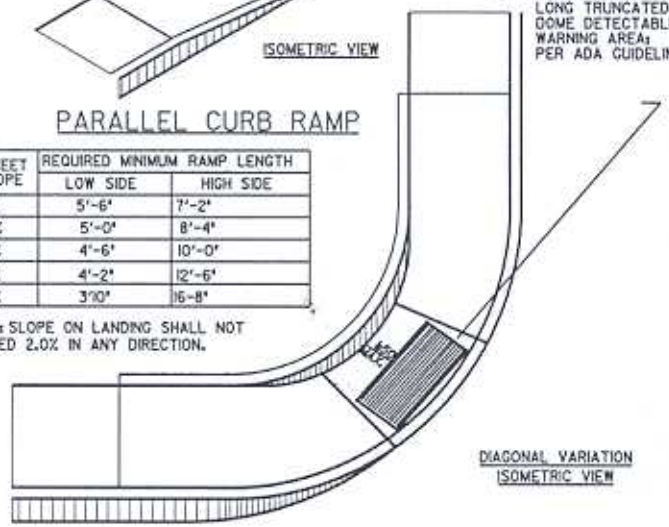

PARALLEL CURB RAMP

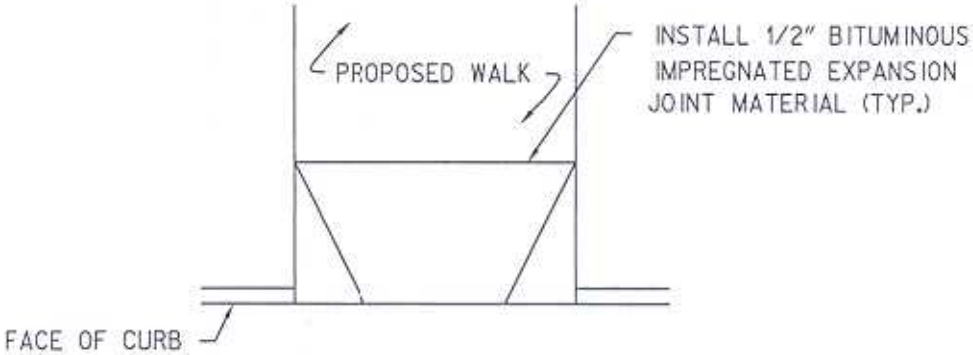

PLAN VIEW

NOTE: REFER TO CODE OF FEDERAL REGULATIONS 20 PART 36 FOR CROSSWALK LOCATION & DIMENSIONS

LOUISVILLE METRO PUBLIC WORKS
444 5th Street, Louisville, Kentucky 40202

ACCESSIBLE CURB RAMP

REVISIONS

Mark W. Adams 4/2/06
APPROVED BY: DATE

STANDARD DRAWING NO. 202

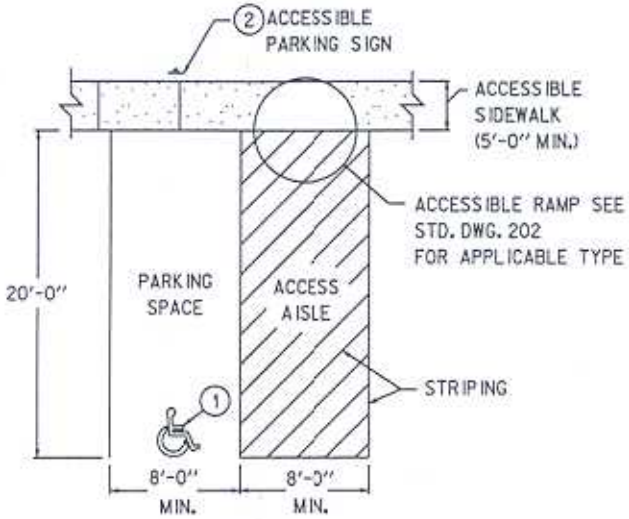

PLAN VIEW OF ONE ACCESSIBLE PARKING SPACE

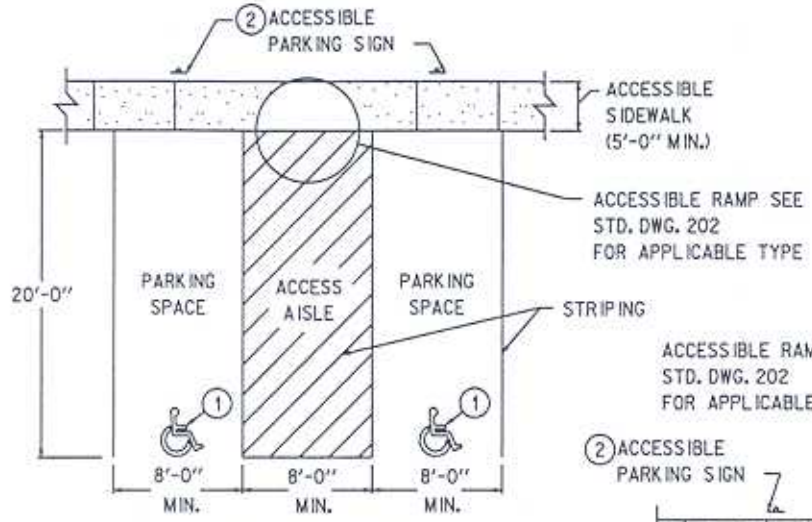

PLAN VIEW OF TWO ACCESSIBLE PARKING SPACES

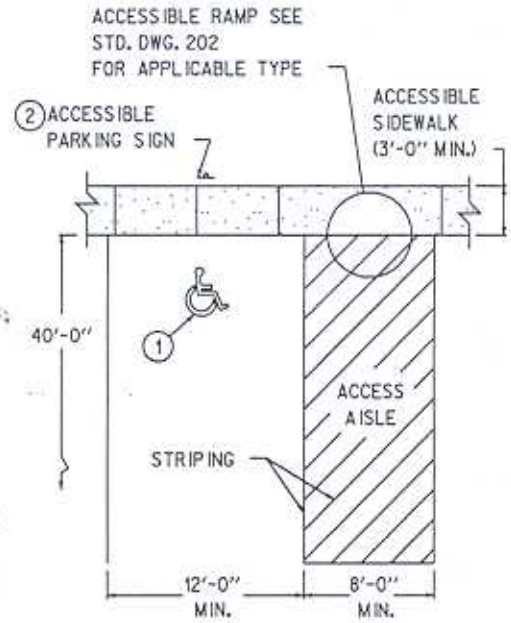

PLAN VIEW OF BUS ACCESSIBLE PARKING SPACE

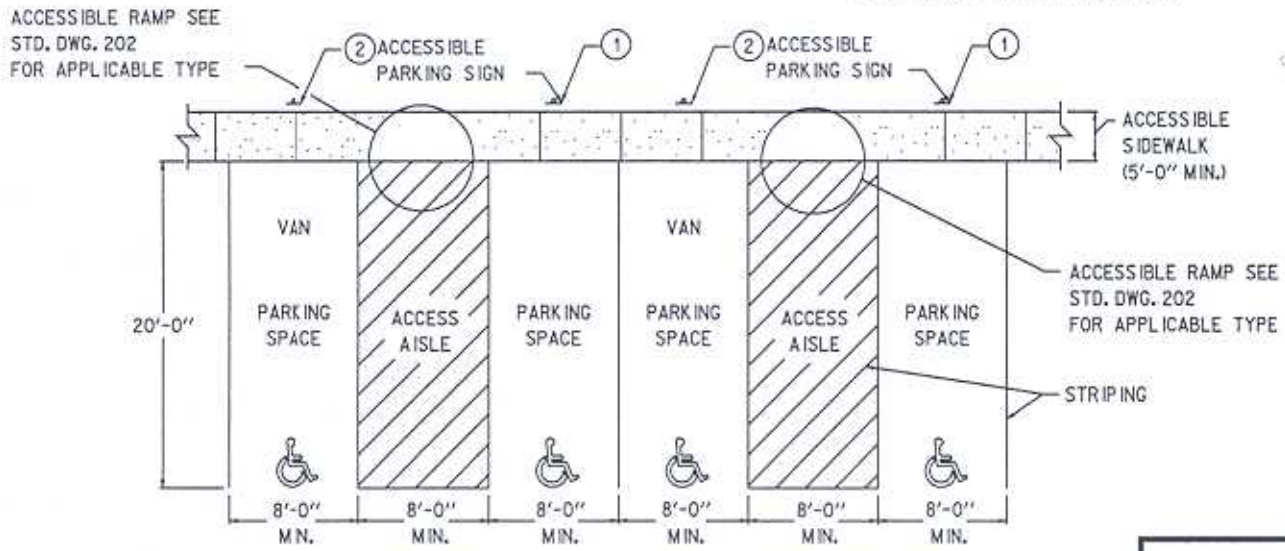

PLAN VIEW OF MULTIPLE ACCESSIBLE PARKING SPACES

NOTES

(1) INTERNATIONAL SYMBOL OF ACCESSIBILITY SIGN
(2) INTERNATIONAL SYMBOL OF ACCESSIBILITY WITH "VAN-ACCESSIBLE" SIGN MOUNTED BELOW.

LOUISVILLE METRO PUBLIC WORKS
444 5th Street, Louisville, Kentucky 40202

ACCESSIBLE PARKING SPACE DETAILS

REVISIONS

APPROVED BY: Mark W. Adams DATE: 9/2/06

STANDARD DRAWING NO. 203

DRAINAGE

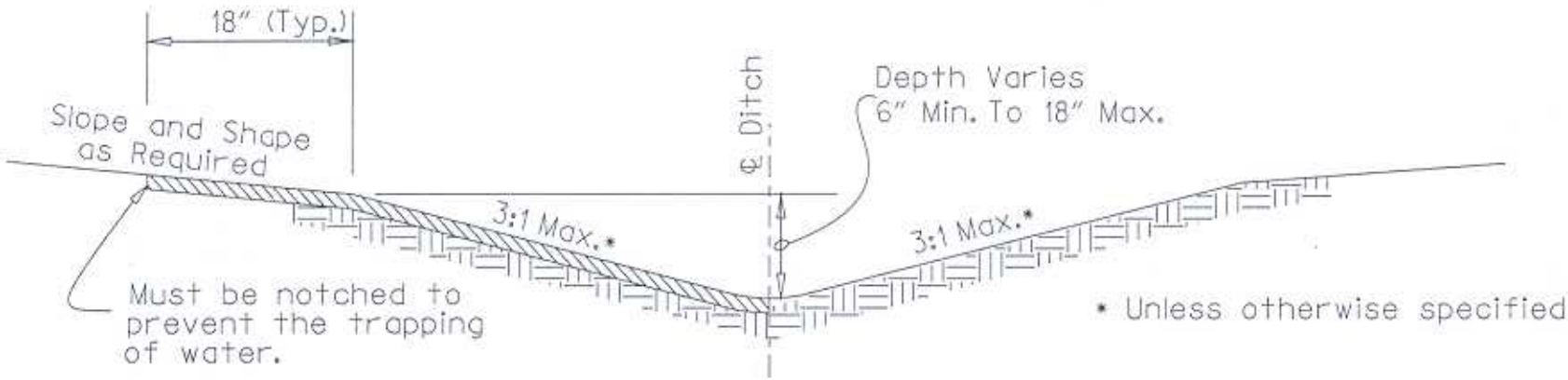

NOTES:

1. Ditches with profile slopes less than 1 1/2% and greater than 10% shall be paved.
2. Sod shall be placed so that ditches shall be free-draining at the edge of all pavements and driveways.
3. Ditch lining shall be designed for full bank flow.
4. Seeded ditches are not permitted. Must be sodded or an erosion control blanket shall be used and pinned or anchored according to manufacturers guidelines.

LOUISVILLE METRO PUBLIC WORKS
444 5th Street, Louisville, Kentucky 40202

EARTH V-DITCH	REVISIONS
Mark W. Adams 6/4/06 (APPROVED BY / DATE)	STANDARD DRAWING NO. 301

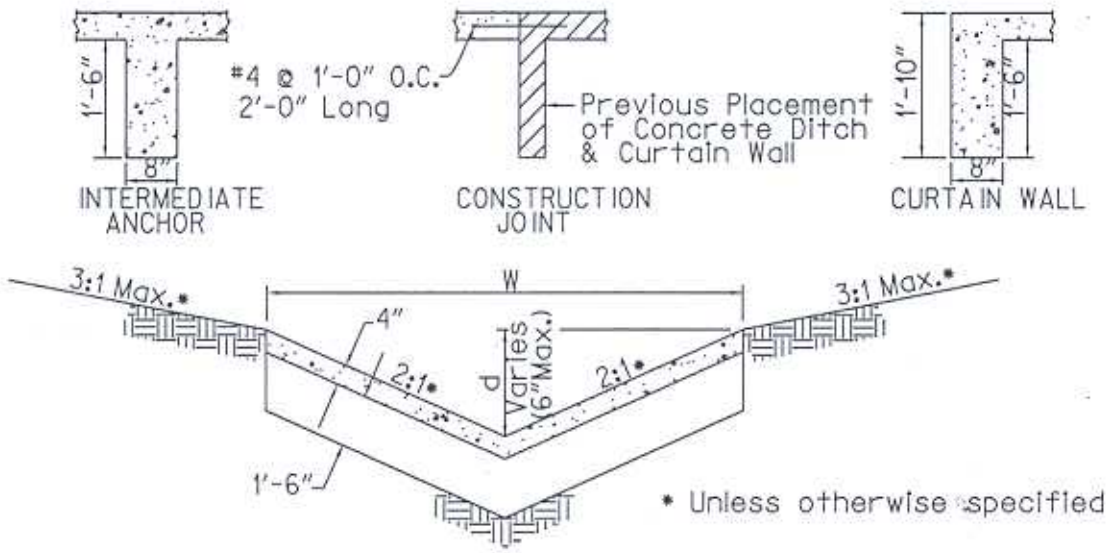

NOTES:

1. Invert may be finished as a radius.
2. Curtain wall shall be constructed at the beginning and end of ditch.
3. If a construction joint is used in the placing of the paved ditch, it shall be constructed with a curtain wall as detailed.
4. The ditch shall be Class "A" concrete with polypropylene fiber.
5. Intermediate anchors shall be used on grades 20% or steeper and spaced every 20 feet.
6. Broom finish perpendicular to flow.

DITCH DEPTH						
W	SIDE SLOPE "d"					
	1:1	1.5:1	2:1	2.5:1	3:1	4:1
1'-0"	6"	4"	3"	2 3/8"	2"	1 1/2"
1'-6"	-	6"	4 1/2"	3 5/8"	3"	2 1/4"
2'-0"	-	-	6"	5"	4"	3"
2'-6"	-	-	-	6"	5"	3 3/4"
3'-0"	-	-	-	-	6"	4 1/2"
4'-0"	-	-	-	-	-	6"

LOUISVILLE METRO PUBLIC WORKS
444 5th Street, Louisville, Kentucky 40202

PAVED V-DITCH

REVISIONS

Mark W. Adams 9/2/02
APPROVED BY: DATE

STANDARD DRAWING NO.
302

Maximum Allowable Trench Width 12" Above Outside Top of Pipe "W"	Inside Diameter of Pipe "D"
2'-6"	4"
2'-8"	6"
2'-10"	8"
3'-0"	10"
3'-5"	12"
3'-9"	15"
4'-1"	18"
4'-4"	21"
4'-8"	24"
5'-1"	27"
5'-5"	30"
5'-10"	33"
6'-2"	36"
6'-8"	39"
6'-11"	42"
7'-6"	48"
D+2t+ 2'-8"	over 48"

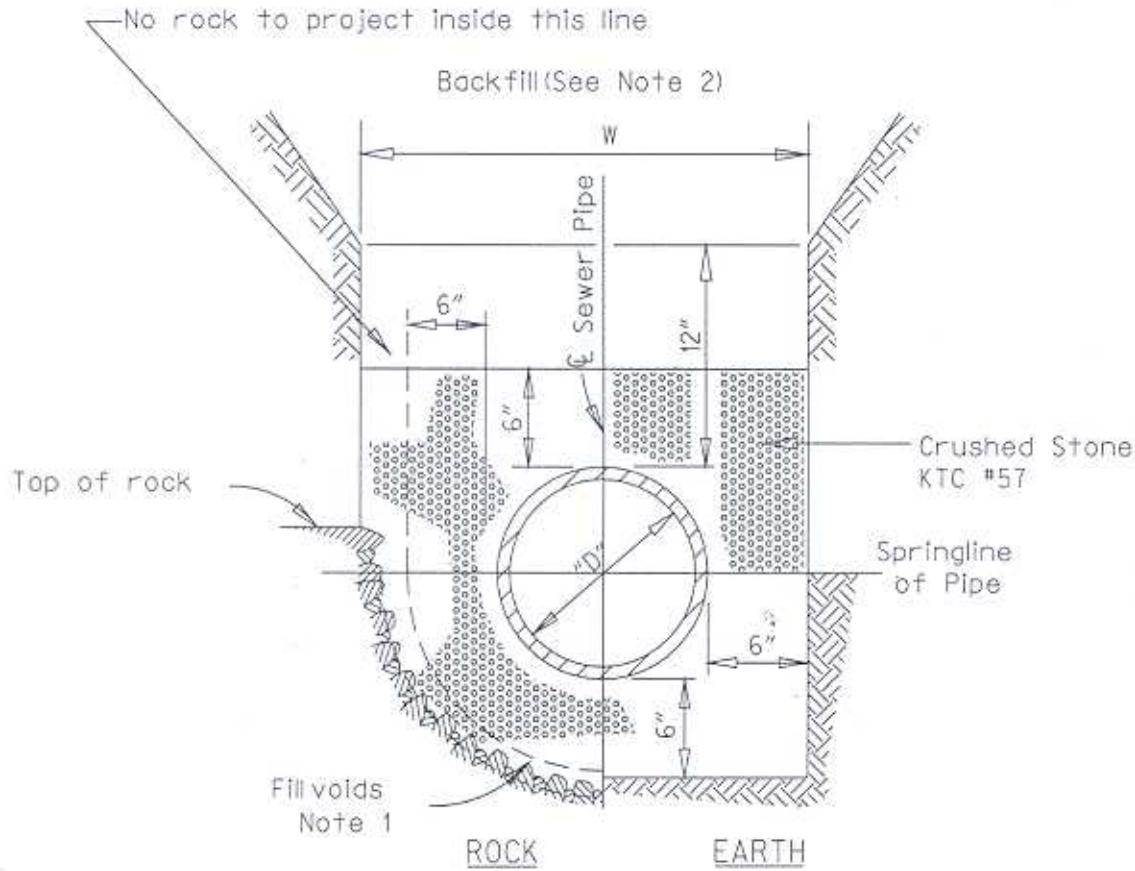

NOTES:

1. All rock loosened shall be removed; voids created by such removal shall be refilled with Crushed Stone KTC #57.
2. Backfill shall be noted on the drawings.
3. Remove stone for pipe bells to provide full contact with bedding.

LOUISVILLE METRO PUBLIC WORKS
444 5th Street, Louisville, Kentucky 40202

CRUSHED STONE ENCASEMENT

REVISIONS

Mark W. Adams 6/2/06
APPROVED BY: DATE

STANDARD DRAWING NO.
303

Maximum Allowable Trench Width 12" Above Outside Top of Pipe "W"	Inside Diameter of Pipe "D"
2'-6"	4"
2'-8"	6"
2'-10"	8"
3'-0"	10"
3'-5"	12"
3'-9"	15"
4'-1"	18"
4'-4"	21"
4'-8"	24"
5'-1"	27"
5'-5"	30"
5'-10"	33"
6'-2"	36"
6'-8"	39"
6'-11"	42"
7'-6"	48"
D+2++ 2'-8"	over 48"

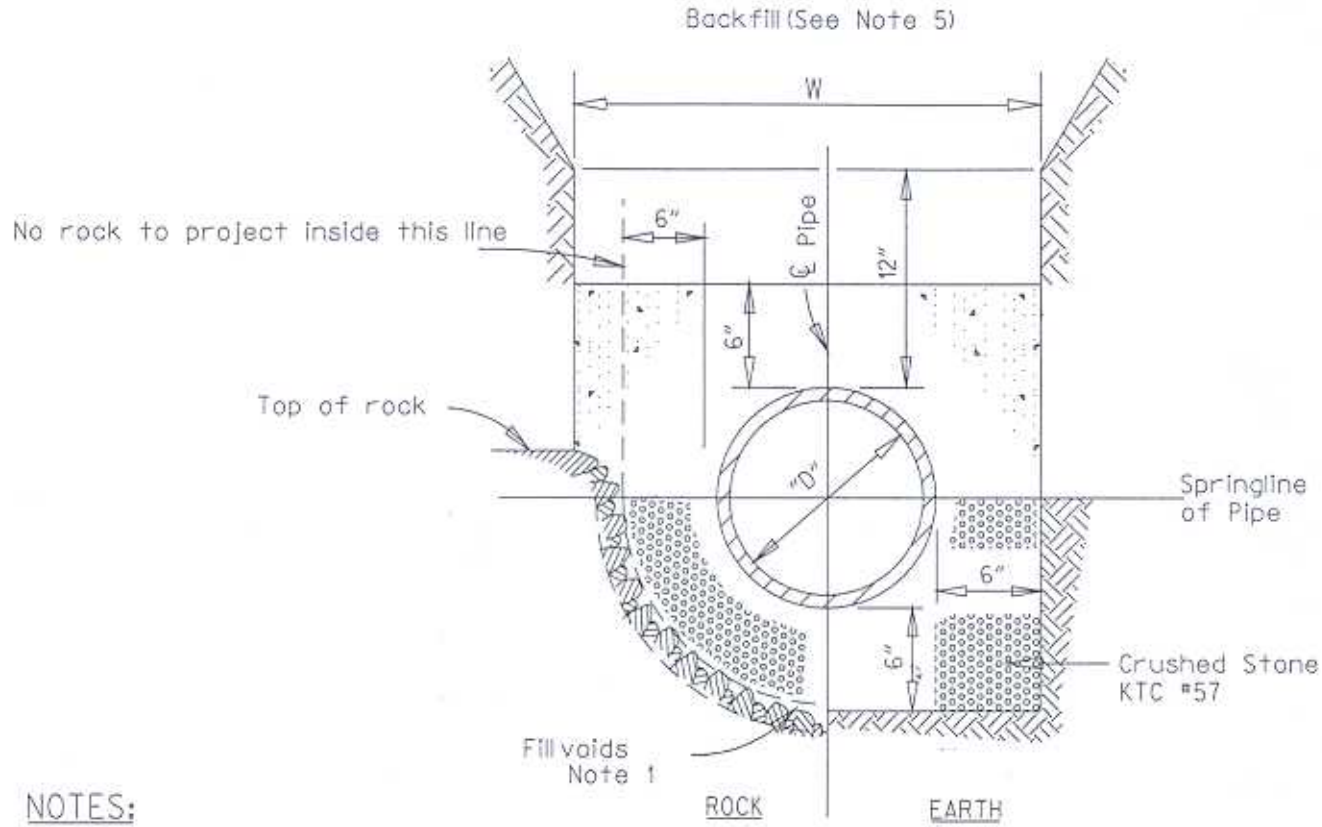

NOTES:

1. All rock loosened shall be removed; voids created by such removal shall be refilled with Crushed Stone KTC #57.
2. If concrete is placed against sheeting, tarred or other suitable paper shall be first attached to the sheeting. The sheeting will not be allowed to be removed until the concrete has sufficiently cured.
3. The concrete cap may be placed against rock, if approved by the engineer.
4. Class "B" concrete shall be used.
5. Backfill shall be as noted on the drawing.
6. Remove stone for pipe bells to provide full contact with bedding.

LOUISVILLE METRO PUBLIC WORKS
444 5th Street, Louisville, Kentucky 40202

CONCRETE CAP

REVISIONS

Mark W. Adams 9/2/06
APPROVED BY: DATE

STANDARD DRAWING NO.
304

WHEN AND WHERE TO USE IT
STABILIZED CONSTRUCTION ENTRANCES SHOULD BE USED AT ALL POINTS WHERE TRAFFIC WILL BE LEAVING A CONSTRUCTION SITE DIRECTLY ONTO A PUBLIC ROAD.

IMPORTANT CONSIDERATIONS
IF WASHING IS USED, PROVISIONS MUST BE MADE TO INTERCEPT THE WASH WATER AND TRAP THE SEDIMENT BEFORE IT IS CARRIED OFFSITE. WASHDOWN FACILITIES SHALL BE REQUIRED AS DIRECTED BY MSD. WASHDOWN AREAS IN GENERAL MUST BE ESTABLISHED WITH CRUSHED GRAVEL AND DRAIN INTO A SEDIMENT TRAP OR SEDIMENT BASIN. CONSTRUCTION ENTRANCES SHOULD BE USED IN CONJUNCTION WITH THE STABILIZATION OF CONSTRUCTION ROADS TO REDUCE THE AMOUNT OF MUD PICKED UP BY VEHICLES.

INSTALLATION
REMOVE ALL VEGETATION AND ANY OBJECTIONABLE MATERIAL FROM THE FOUNDATION AREA.

DIVERT ALL SURFACE RUNOFF AND DRAINAGE FROM STONES TO A SEDIMENT TRAP OR BASIN.

INSTALL A GEOTEXTILE FABRIC PRIOR TO PLACING STONE .

INSTALL A CULVERT PIPE ACROSS THE ENTRANCE WHEN NEEDED TO PROVIDE POSITIVE DRAINAGE.

THE ENTRANCE SHALL CONSIST OF KTC NO. 3 AGGREGATE WITH A MINIMUM THICKNESS OF SIX INCHES.

MINIMUM DIMENSIONS OF THE ENTRANCE SHALL BE 24 FEET WIDE BY 100 FEET LONG, AND MAY BE MODIFIED AS NECESSARY TO ACCOMMODATE SITE CONSTRAINTS.

INSPECTION AND MAINTENANCE
INSPECT ENTRANCES EVERY SEVEN (7) CALENDAR DAYS AND WITHIN 24 HOURS AFTER EACH RAINFALL EVENT THAT PRODUCES 1/2 INCHES OR MORE OF PRECIPITATION, OR AFTER HEAVY USE. CHECK FOR MUD AND SEDIMENT BUILDUP AND PAD INTEGRITY. MAKE DAILY INSPECTIONS DURING PERIODS OF WET WEATHER. MAINTENANCE IS REQUIRED MORE FREQUENTLY IN WET WEATHER CONDITIONS. RESHAPE THE STONE PAD AS NEEDED FOR DRAINAGE AND RUNOFF CONTROL.

WASH OR REPLACE STONES AS NEEDED AND AS DIRECTED BY THE INSPECTOR. THE STONE IN THE ENTRANCE SHOULD BE WASHED OR REPLACED WHENEVER THE ENTRANCE FAILS TO \REDUCE MUD BEING CARRIED OFF-SITE BY VEHICLES. FREQUENT WASHING WILL EXTEND THE USEFUL LIFE OF STONE.

IMMEDIATELY REMOVE MUD AND SEDIMENT TRACKED OR WASHED ONTO PUBLIC ROADS BY BRUSHING OR SWEEPING. FLUSHING SHOULD ONLY BE USED WHEN THE WATER CAN BE DISCHARGED TO A SEDIMENT TRAP OR BASIN.

INSPECT AND CLEAN SEDIMENT TRAPS IMMEDIATELY FOLLOWING EACH RAINFALL.

DISPOSE OF SEDIMENT IN A SUITABLE AREA IN SUCH A MANNER THAT WILL NOT ERODE.

REMOVE TEMPORARY CONSTRUCTION ENTRANCES AS SOON AS THEY ARE NO LONGER NEEDED TO PROVIDE ACCESS TO THE SITE. BRING THE DISTURBED AREA TO GRADE, AND RESTORE TO PREVIOUS CONDITIONS.

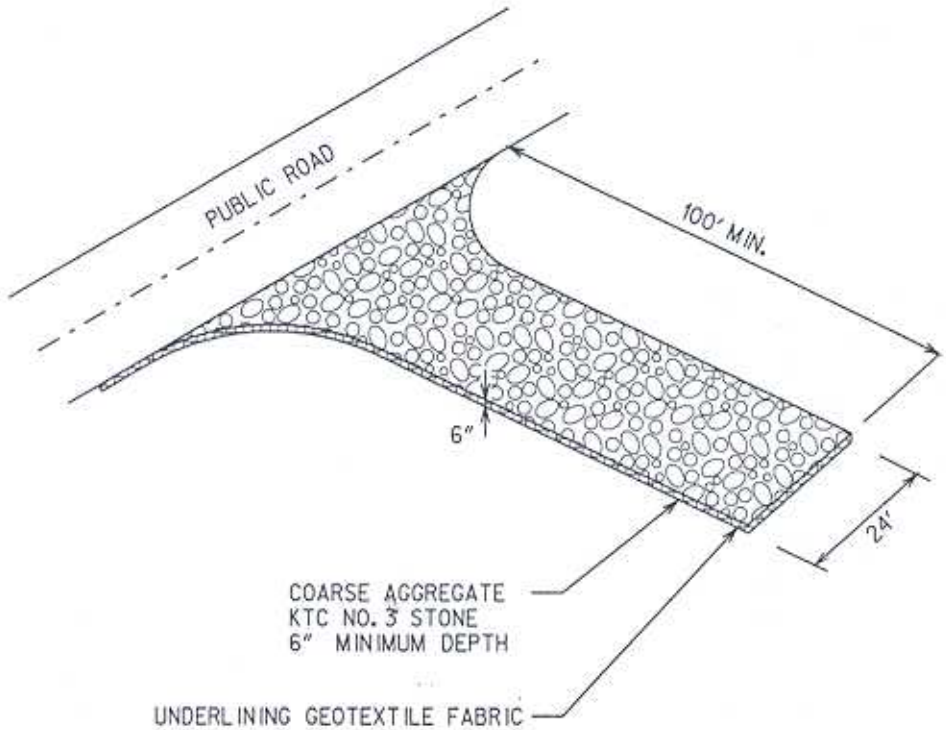

LOUISVILLE METRO PUBLIC WORKS
444 5th Street, Louisville, Kentucky 40202

TEMPORARY CONSTRUCTION ENTRANCE

REVISIONS

Mark W. Adams 9/6/06
APPROVED BY DATE

STANDARD DRAWING NO.
305

TYPICAL ADJUSTMENT DETAIL AND CONSTRUCTION NOTES FOR MANHOLE FRAMES AND COVERS

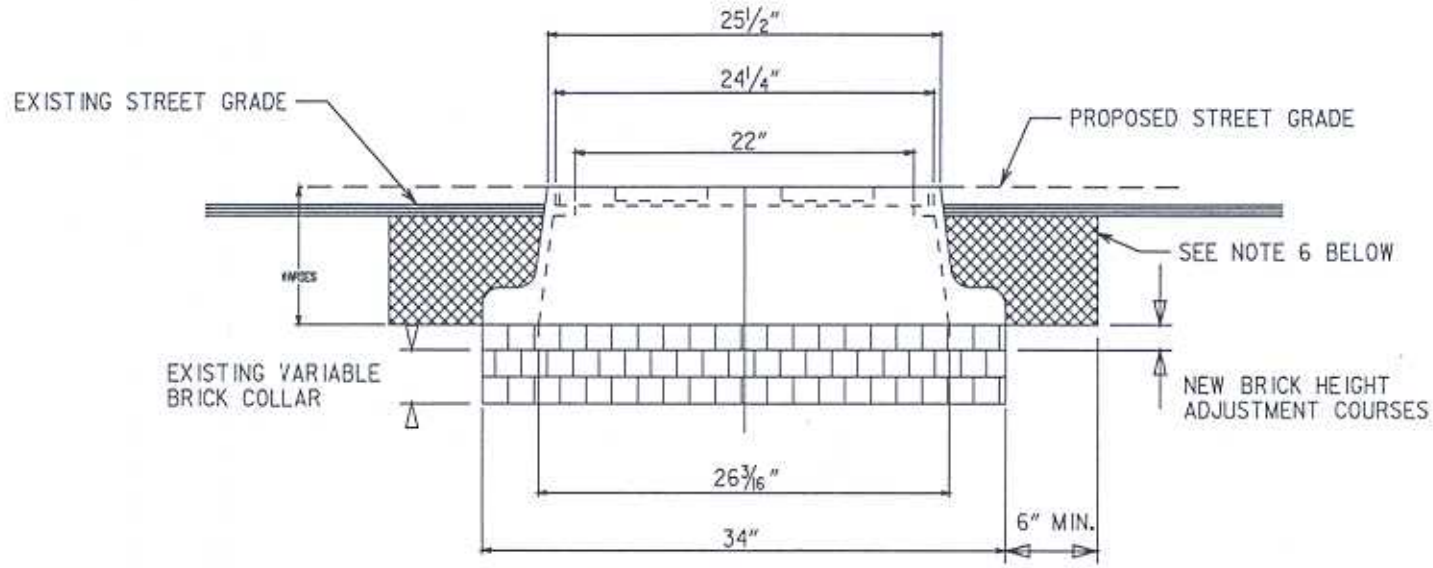

1. All manhole frame or catch basin frame height adjustment shall be subject to field inspection by MSD and shall be subject to correction as directed by the Engineer at no additional cost to Louisville Metro or MSD.
2. Any damaged frame, grate or cover discovered by the Cntractor shall be reported to MSD's Inspector and replaced. Replacement hardware items shall be obtained by the Contractor from MSD's Yard, upon presentation of an MSD Inspector validated Stores Requisition and exchange of the damaged hardware items.
3. All materials shall conform to MSD Technical Specifications, which are on file and available to the Contractor at MSD's Engineering Division Office, 700 W. Liberty St. Louisville KY 40202.
4. All workmanship shall be first class and in conformity with MSD Technical Specifications.
5. No wood shims or blocks shall be used to adjust or reset the frame height.
6. Cross-hatch area to be filled with concrete having a minimum 28 day compressive strength of 2000 psi.
7. Frame and grate to be raised with brick and mortar as directed by the Engineer.
8. Concrete shall be poured back same day as breaking and excavating.
9. Flange resting on new brick adjustment course(s) must be supported fully by brick course.
10. Excavated edges shall be vertical and at least 6" beyond O.D. of flange.
11. All edges neatly cut and trimmed; hand jackhammered only-no hoeram.

LOUISVILLE METRO PUBLIC WORKS
444 5th Street, Louisville, Kentucky 40202

MANHOLE AND CATCH BASIN ADJUSTMENT DETAIL	REVISIONS
Mark W. Adams 6/2/06 (APPROVED BY / DATE)	STANDARD DRAWING NO. 306

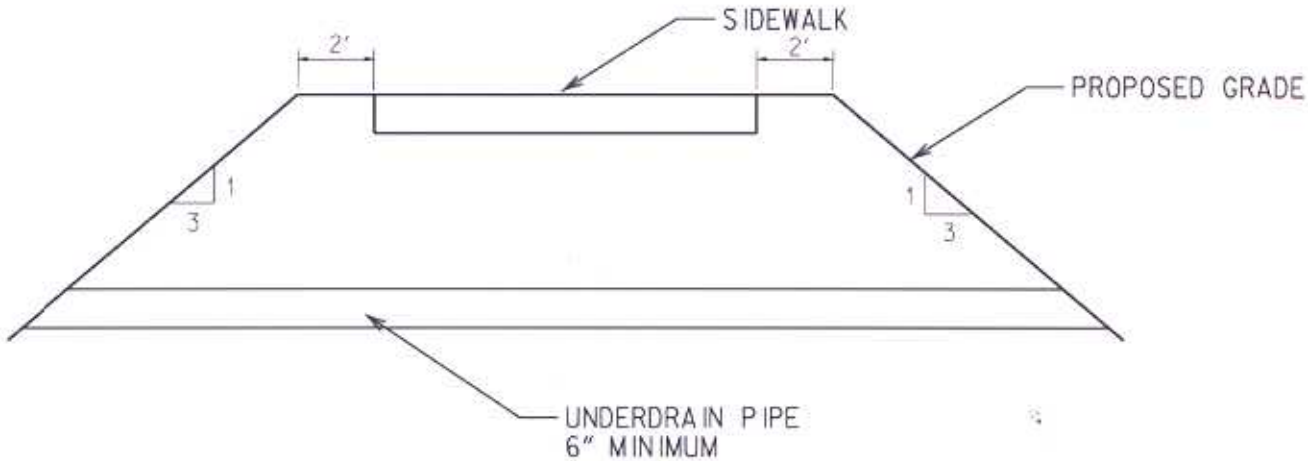

NOTES:

UNDERDRAIN TO BE PVC SDR 35 PIPE. SIZE TO BE DETERMINED BASED ON WATER FLOW, BUT NEVER LESS THAN 8". LENGTH OF PIPE VARIES BASED ON EMBANKMENT WIDTH. TAPER ENDS OF PIPE TO MATCH EMBANKMENT SLOPE ANGLE. IF ELEVATIONS DO NOT ALLOW A MINIMUM OF 4" OF 610 STONE, PLACE CLASS A CONCRETE TO SPRING LINE OF DRAIN WITHIN THE 6' CRITICAL ZONE.

DO NOT DIP SIDEWALK TO ALLOW SWALE TO DRAIN OVER. ADJUST GRADES TO ALLOW UNDERDRAIN.

LOUISVILLE METRO PUBLIC WORKS
444 5th Street, Louisville, Kentucky 40202

SIDEWALK UNDERDRAIN DETAIL

REVISIONS

APPROVED BY: DATE

STANDARD DRAWING NO.
307

PAVEMENT / ROADWAY

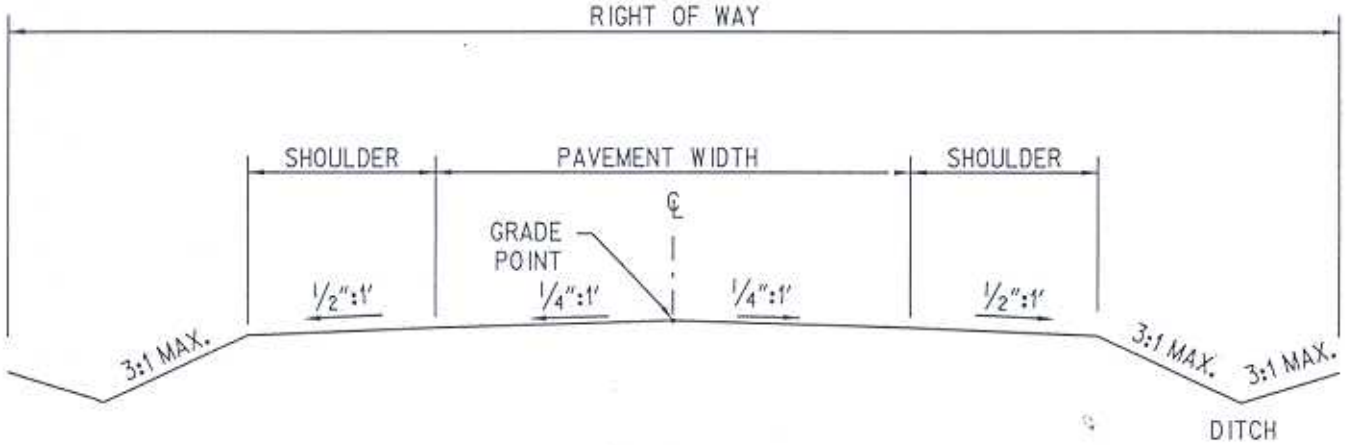

TYPICAL SECTION

NOTES:

PAVEMENT WIDTH: 24' NORMAL MINIMUM

PAVEMENT GRADE:
MAXIMUM: 10%
MINIMUM: 1%

SHOULDER WIDTH: 6' MIN. GRASS
8' MIN. SHOULDER WITH COLLECTOR

RIGHT-OF-WAY: 60' INTERNAL ROADS

ROADSIDE DITCH DEPTH: 6" MIN.
18" MAX.

*REFER TO AASHTO GREENBOOK FOR CROSS SLOPE

LOUISVILLE METRO PUBLIC WORKS
444 5th Street, Louisville, Kentucky 40202

TYPICAL ROADWAY WITH SHOULDER

REVISIONS

APPROVED BY: Mark W. Adams DATE: 9/2/06

STANDARD DRAWING NO. 601

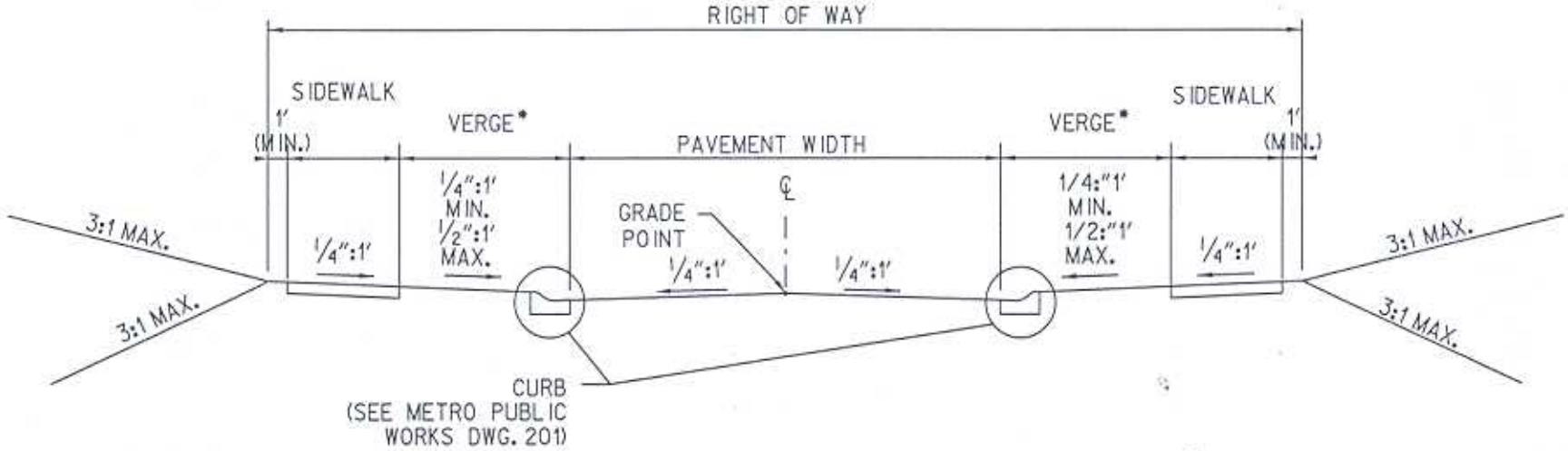

TYPICAL SECTION

NOTES:

MINIMUM PAVEMENT WIDTH: 24' NORMAL
22' WITH CURB AND GUTTER
20' CUL-DE-SAC CURB AND GUTTER

PAVEMENT GRADE:
MAXIMUM: 10%
MINIMUM: 1%

* REFER TO THE LAND DEVELOPMENT CODE FOR APPLICABLE WIDTH

•REFER TO AASHTO GREENBOOK FOR CROSS SLOPE

LOUISVILLE METRO PUBLIC WORKS
444 5th Street, Louisville, Kentucky 40202

TYPICAL ROADWAY WITH CURB & GUTTER

REVISIONS

Mark W. Adams 6/2/06
APPROVED BY: DATE

STANDARD DRAWING NO.
602

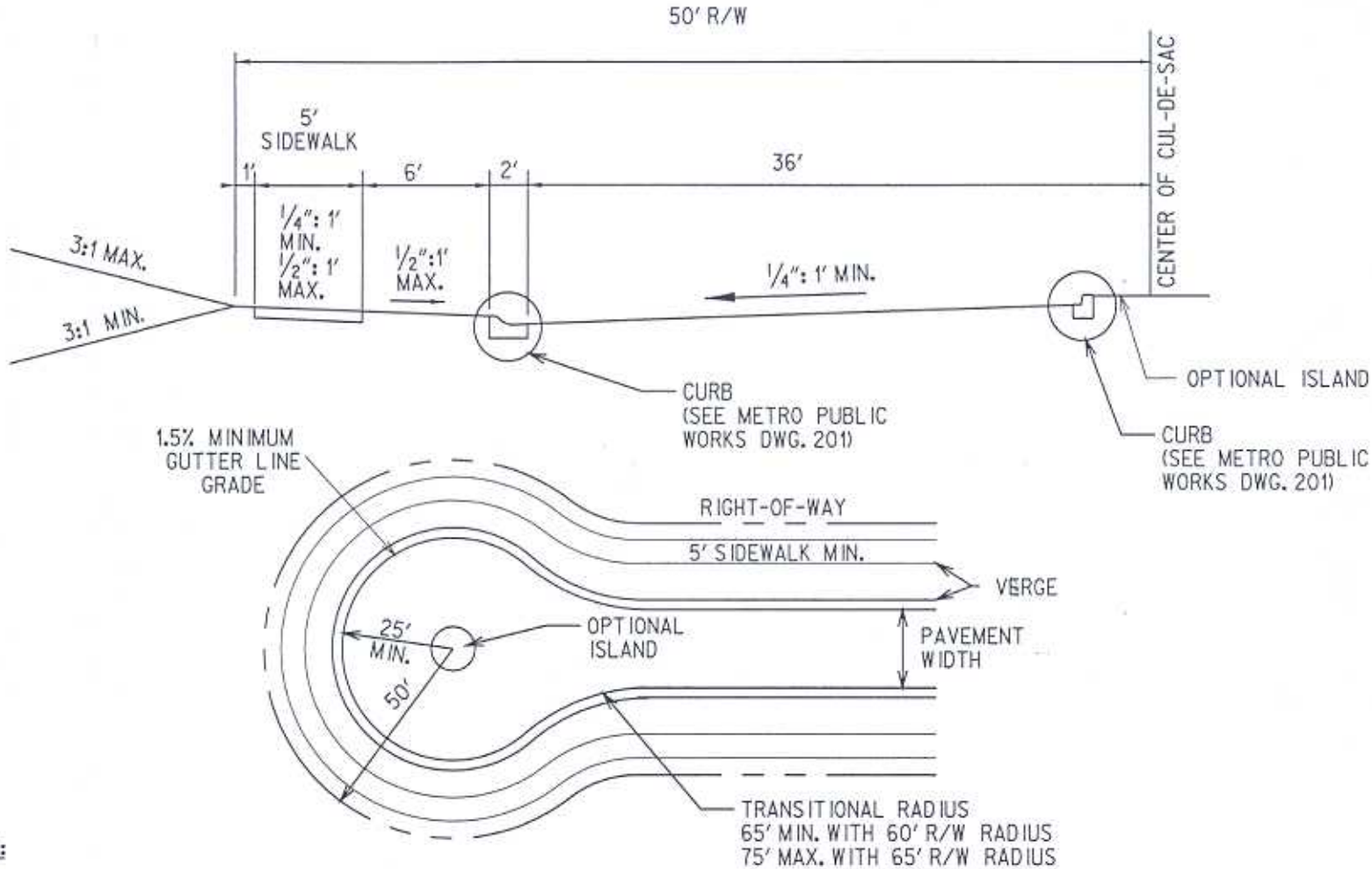

NOTES:

PAVEMENT WIDTH: 20' MIN. CUL-DE-SAC CURB AND GUTTER
50' MIN. COMMERCIAL CUL-DE-SAC

SHOULDER WIDTH: 6' MIN.

RIGHT-OF-WAY: 50' CUL-DE-SAC
75' COMMERCIAL CUL-DE-SAC

1/2":1' MIN. GRADE ON CURB IN CUL-DE-SAC

ROADSIDE DITCH DEPTH: 6" MIN.
18" MAX.

MAX. GRADE: 6%

CONSTRUCTION SPOT GRADES SHALL BE SHOWN FOR CENTER LINE AND CURB ALONG CUL-DE-SAC

LOUISVILLE METRO PUBLIC WORKS
444 5th Street, Louisville, Kentucky 40202

CUL-DE-SAC WITH OPTIONAL MEDIAN

REVISIONS

Mark W. Adams 9/1/06
APPROVED BY: DATE

STANDARD DRAWING NO.
603

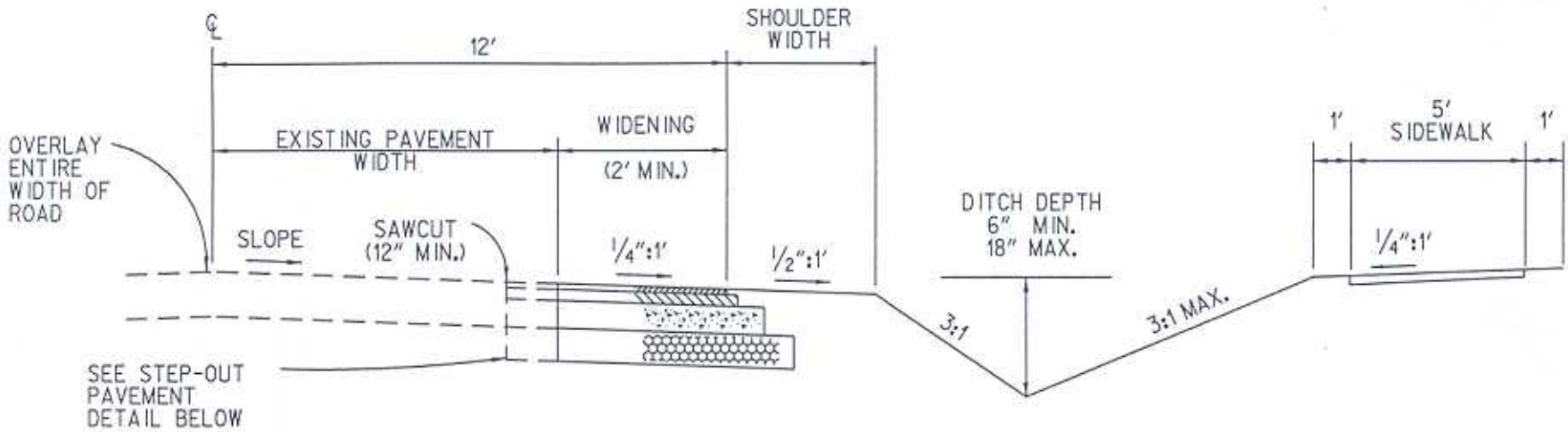

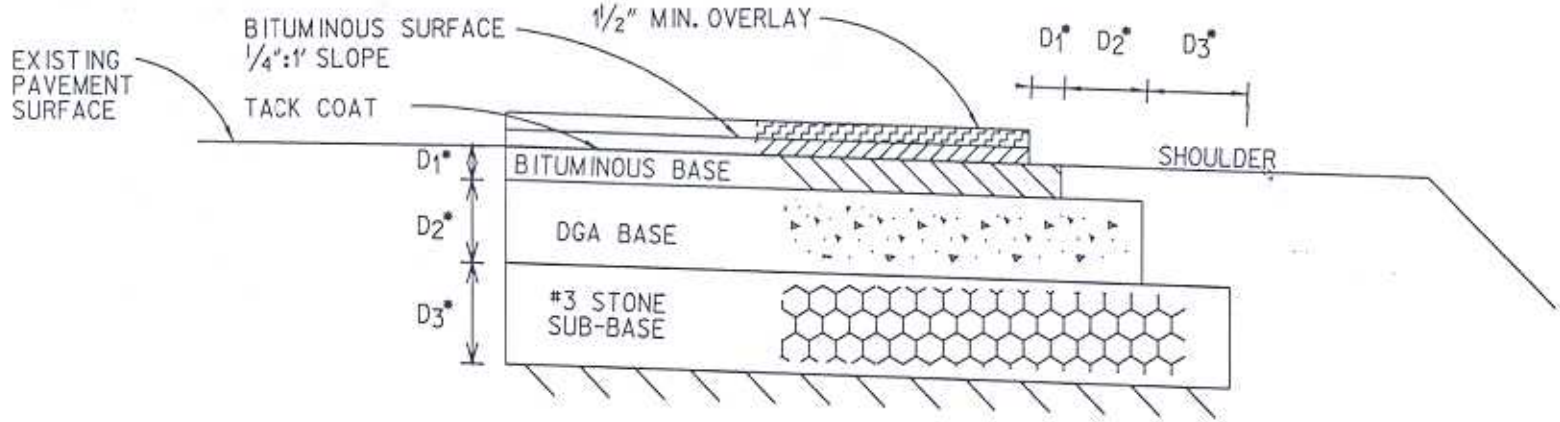

COMPACTED SUBGRADE
95% PROCTOR DENSITY AT +2% TO -4% OPTIMUM MOISTURE

* SEE KENTUCKY DEPARTMENT OF HIGHWAYS PAVEMENT DESIGN STANDARDS FOR TYPICAL PAVEMENT SECTION DEPTHS

NOTES:

SIDEWALK SLOPE: 1/4":1' MIN.
1/2":1' MAX.

STEP-OUT PAVEMENT SECTION

FULL WIDTH OF ROADWAY SHALL HAVE MIN. 1 1/2" OVERLAY WITH ASSOCIATED STRIPING AND SIGNAGE AS REQUIRED BY MUTCD. LEVELING AND WEDGING MAY BE REQUIRED.

WHEN ENTIRE ROADWAY WIDTH IS TO BE OVERLAYED BITUMINOUS BASE DEPTH SHALL BE INCREASED TO MATCH SURFACE GRADE OF EXISTING PAVEMENT WITH 1-1/2" OVERLAY COVERING EXISTING PAVEMENT AND NEW BITUMINOUS BASE.

LOUISVILLE METRO PUBLIC WORKS
444 5th Street, Louisville, Kentucky 40202

ROADWAY WIDENING SECTION

REVISIONS

Mark W. Adams 6/2/06
APPROVED BY: DATE

STANDARD DRAWING NO.
604

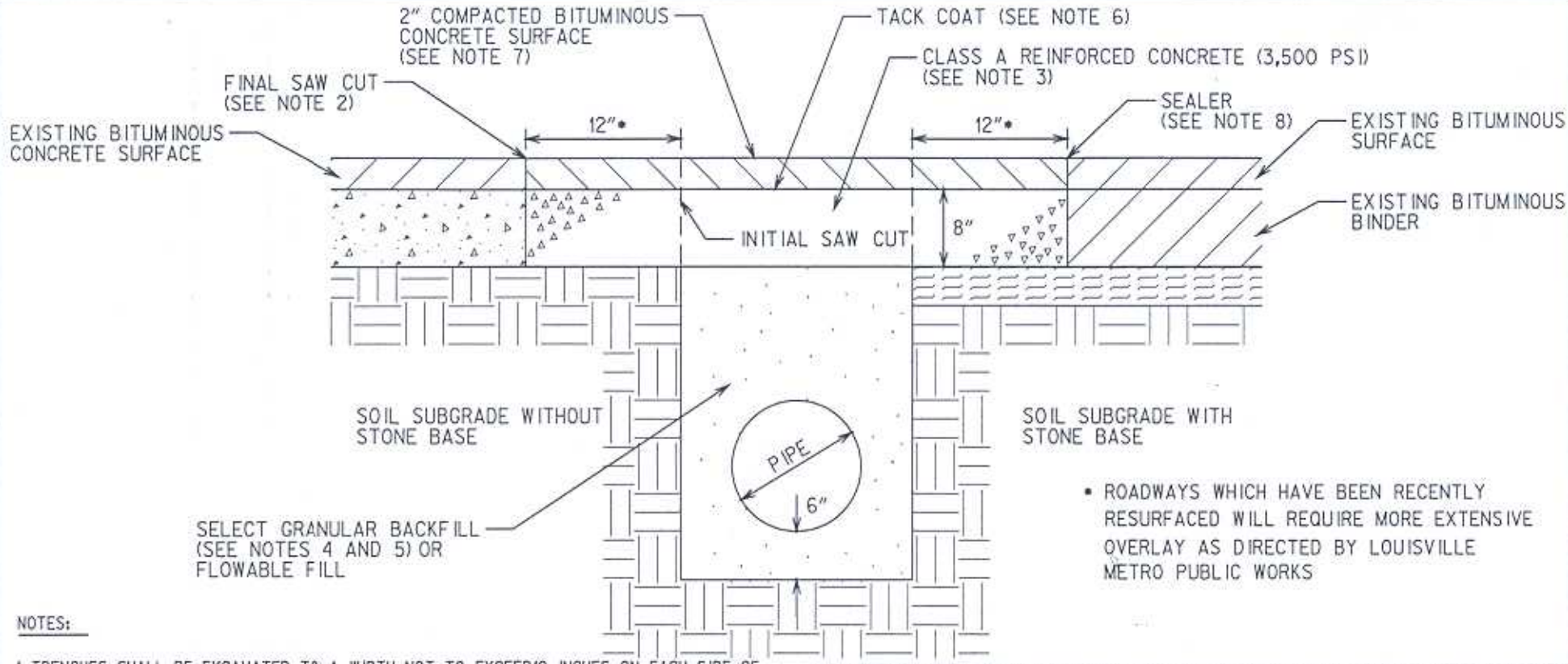

* ROADWAYS WHICH HAVE BEEN RECENTLY RESURFACED WILL REQUIRE MORE EXTENSIVE OVERLAY AS DIRECTED BY LOUISVILLE METRO PUBLIC WORKS

NOTES:

1. TRENCHES SHALL BE EXCAVATED TO A WIDTH NOT TO EXCEED12 INCHES ON EACH SIDE OF THE PIPE FOR PIPE DIAMETERS OF 24 INCHES OR LESS AND NOT TO EXCEED 15 INCHES ON EACH SIDE OF THE PIPE FOR PIPE DIAMETERS GREATER THAN 24 INCHES. TRENCH WALLS SHALL BE AS NEARLY VERTICAL AS POSSIBLE.
2. THE FINAL SAW CUT SHALL BE MADE A DISTANCE OF 12 INCHES BEYOND THE TRENCH, AFTER THE TRENCH EXCAVATION AND BACKFILL ARE COMPLETE, AND IMMEDIATELY PRIOR TO PLACING CONCRETE.
3. CONCRETE CAP TO BE 8 INCHES. IF THE EXISTING PAVEMENT SECTION IS LESS THAN 10 INCHES THICK, EXCAVATION OF UNDERLYING STONE BASE OR SOIL SUBGRADE WILL BE REQUIRED TO PROVIDE THE SPECIFIED THICKNESS.
4. SELECT GRANULAR BACKFILL SHALL CONSIST OF NO. 57 STONE, OR SAND. THE NO. 57 STONE SHALL BE PLACED IN MAXIMUM 6 INCH LOOSE LIFTS AND MECHANICALLY COMPACTED. THE SAND BACKFILL SHALL BE FLUSHED AND JETTED.
5. IN ROADWAY EMBANKMENT SITUATIONS WHEN SAND BACKFILL IS UTILIZED, COMPACTED EARTH SHALL BE PLACED IN THIS ZONE WITHIN 5 FEET (HORIZONTAL DISTANCE) OF THE EMBANKMENT SLOPE.
6. TACK MATERIAL CONSISTING OF EMULSIFIED ASPHALT SS-1H SHALL BE PLACED ON THE SURFACE OF THE CONCRETE CAP AT THE RATE OF 0.1 GALLONS PER SQUARE YARD, AND ALLOWED TO "BREAK" PRIOR TO PLACEMENT OF THE BITUMINOUS CONCRETE SURFACE.
7. BITUMINOUS CONCRETE SHALL CONSIST OF MATERIALS MEETING THE REQUIREMENTS OF SECTION 401 OF THE CURRENT KTC STANDARD SPECIFICATIONS FOR ROAD AND BRIDGE CONSTRUCTION.
8. PAVEMENT JOINTS SHALL BE SEALED WITH AN APPROVED JOINT SEALANT AFTER PLACEMENT OF THE BITUMINOUS CONCRETE SURFACE.
9. THE CONTRACTOR SHALL BE RESPONSIBLE DURING THE ENSUING 5 YEARS FOR PROPER BACKFILLING AND REPLACEMENT OF THE SURFACE. DURING THE 5 YEAR PERIOD ANY SETTLEMENT SHALL BE IMMEDIATELY REPAIRED BY THE CONTRACTOR AT THE EXPENSE OF THE CONTRACTOR.
10. CONCRETE CAP MUST BE PLATED UNTIL CONCRETE REACHES STRENGTH REQUIREMENTS (3500 PSI).
11. PLATES MUST BE SECURED AND/OR RECESSED AT ALL TIMES.
12. FOR CONCRETE PAVEMENT REPAIR SEE KTC SPECIFICATION FOR SPECIAL PROVISIONS SEC. 76 PP 1-12.

LOUISVILLE METRO PUBLIC WORKS
444 5th Street, Louisville, Kentucky 40202

PAVEMENT RESTORATION DETAIL

REVISIONS

Mark W. Adams 6/2/06
APPROVED BY: DATE

STANDARD DRAWING NO. 605

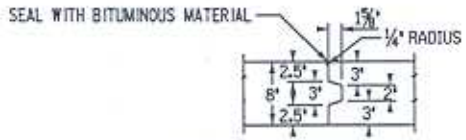

DETAIL OF CONSTRUCTION JOINT

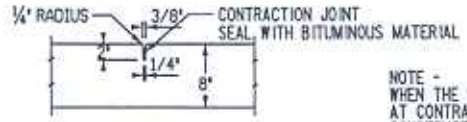

SECTION C-C

NOTE -
WHEN THE END OF WORK FOR THE DAY STOPS AT CONTRACTION JOINT THEN SAME MUST BE CONSTRUCTED AS A CONSTRUCTION JOINT (SEE DETAIL)

NOTE: ENTIRE SLAB TO BE POURED AS ONE UNIT. CONSTRUCTION JOINT TO BE USED ONLY BY PERMISSION OF THE ENGINEER.

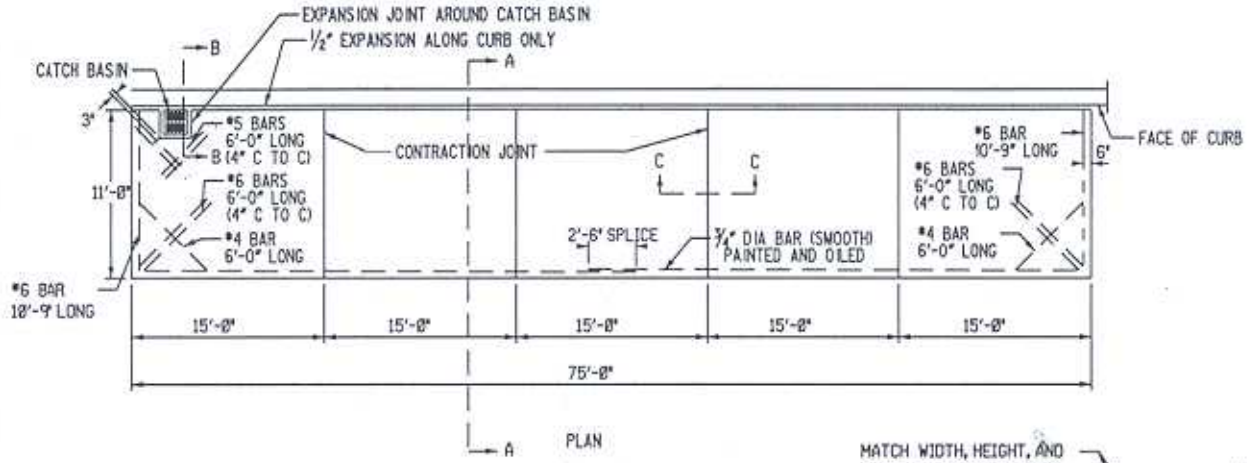

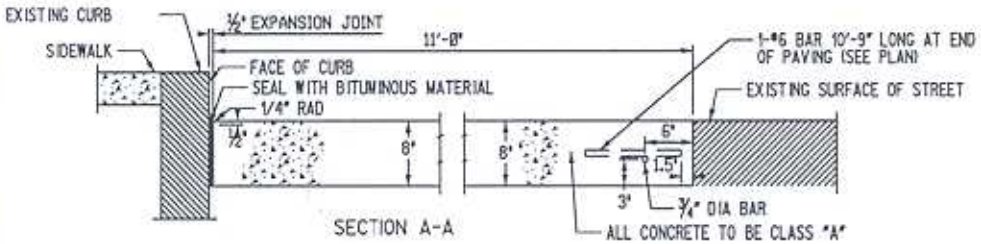

SECTION A-A

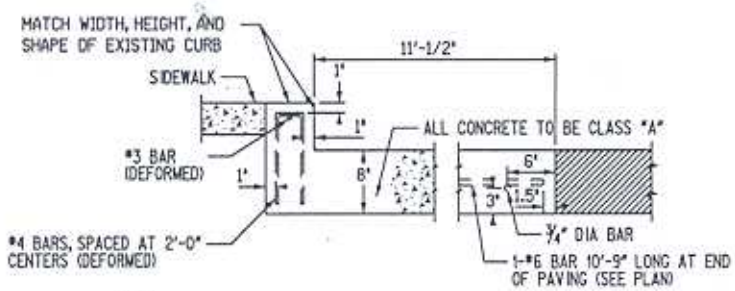

NOTE -
ALTERNATE DESIGN WHERE NECESSARY TO REMOVE CURB. PAYMENT FOR CURB INCLUDING BASE SHALL BE CONTRACT PRICE PER SQUARE YARD FOR BUS STOP PAVING.

CURB TO BE DEPRESSED AT DRIVEWAYS AS DIRECTED BY THE ENGINEER.
ALL REINFORCING STEEL TO BE DEFORMED BARS EXCEPT AS NOTED.

NOTE -
WHERE SPECIFIED, PRICE BID FOR BUS STOP SHALL INCLUDE EXCAVATION, REMOVAL OF CONCRETE GUTTER AND REPLACING OF ADJACENT SURFACE AND BASE.
UNIT PRICE BID PER SQUARE YARD FOR BUS STOP PAVING TO INCLUDE STEEL BARS, EXPANSION MATERIAL AND RESETTING CATCH BASINS. NEW CATCH BASINS REQUIRED TO BE PAID AS SEPARATE ITEM.

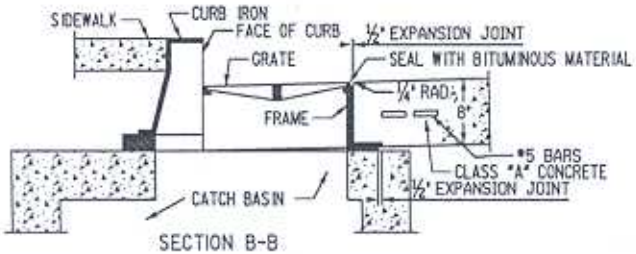

SECTION B-B

LOUISVILLE METRO PUBLIC WORKS
444 5th Street, Louisville, Kentucky 40202

BUS STOP CONCRETE PAD

REVISIONS

APPROVED BY: Mark W. Adams DATE: 6/2/06

STANDARD DRAWING NO. 606

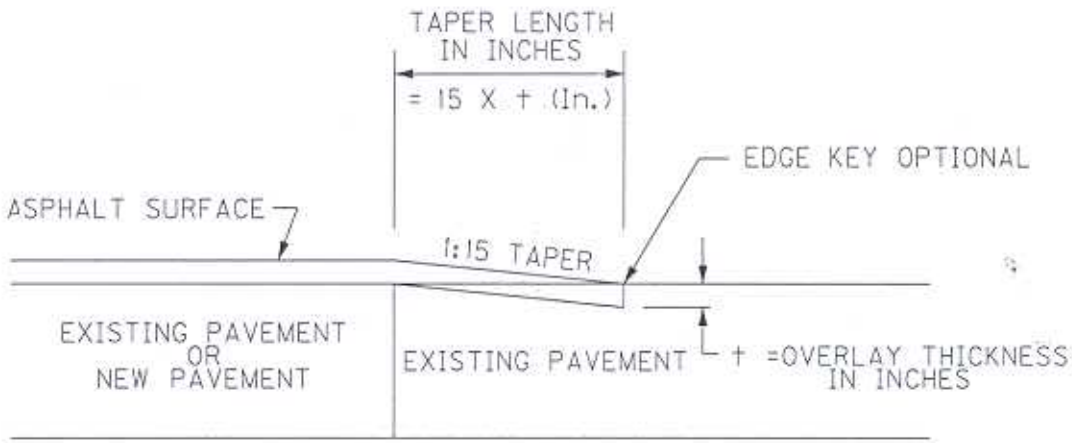

LOUISVILLE METRO PUBLIC WORKS
444 5th Street, Louisville, Kentucky 40202

EDGE KEY DETAIL

REVISIONS

Mark W. Adams 6/2/06
APPROVED BY: DATE

STANDARD DRAWING NO.
607

SIDEWALKS

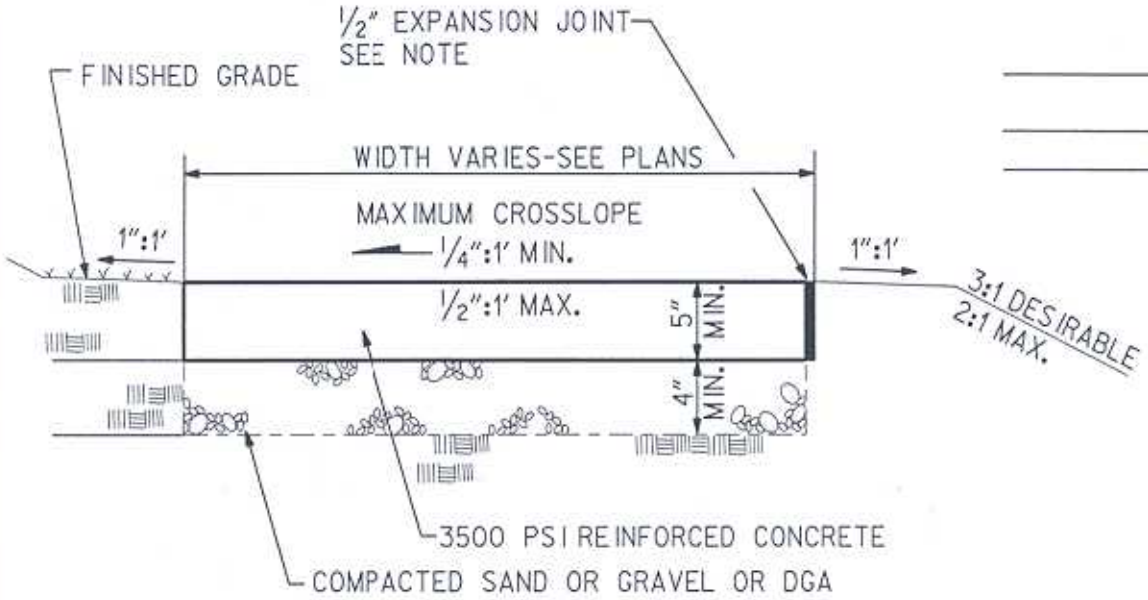

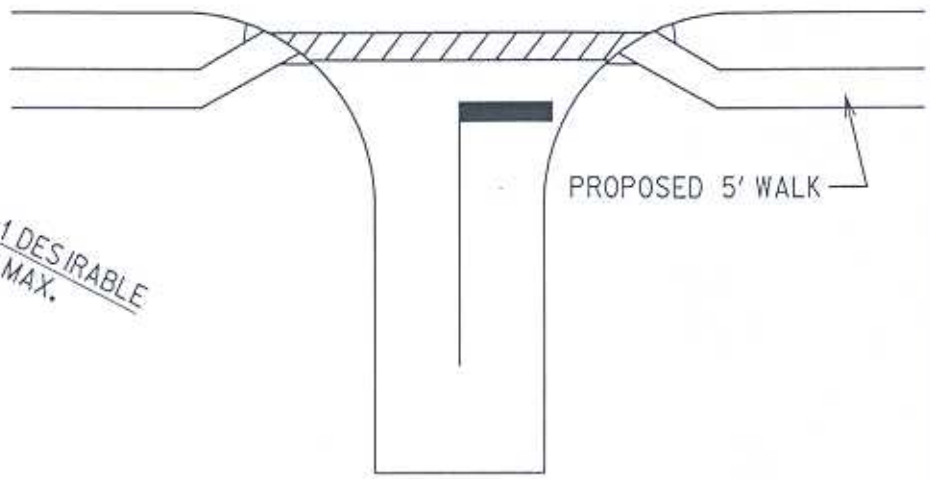

INTERSECTION DETAIL

NOTES:

REFER TO KTC STANDARD SPECIFICATIONS 2004 SEC. 505.03.03 A.

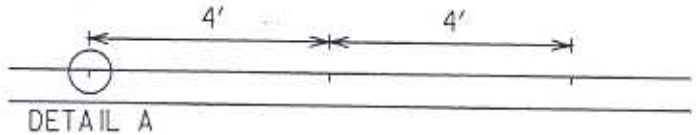

DETAIL A

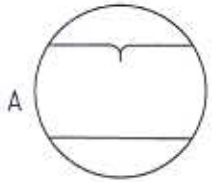

JOINTS TO BE 1" DEEP WITH 1/4" ROUNDOVER OR SAWED 1" DEEP WITHIN 24 HOURS

PROFILE AND JOINT DETAILS

LOUISVILLE METRO PUBLIC WORKS
444 5th Street, Louisville, Kentucky 40202

TYPICAL CONCRETE SIDEWALK

REVISIONS

Mark W. Adams 6/2/06

APPROVED BY: DATE

STANDARD DRAWING NO. 701

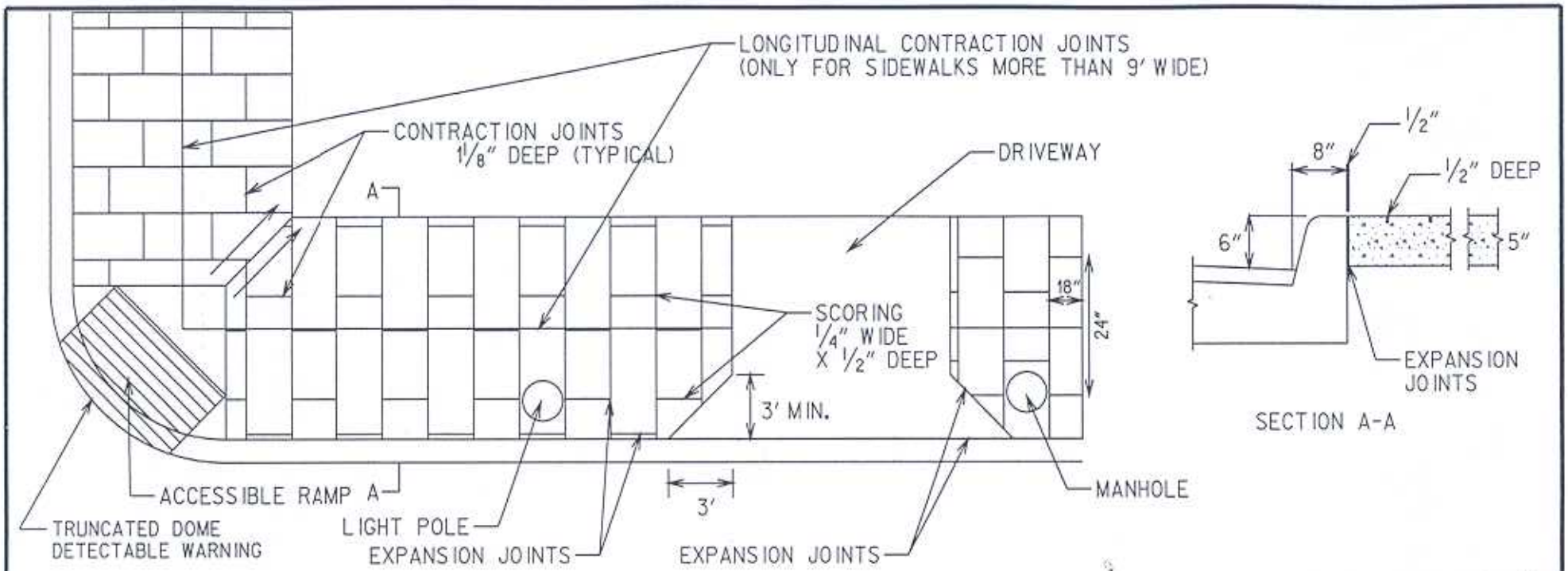

SPECIFICATIONS
THIS STANDARD APPLIES ONLY TO THE CENTRAL BUSINESS DISTRICT.

ALL SIDEWALK AND DRIVEWAY CONSTRUCTION IN THE PUBLIC RIGHTS-OF-WAY IN THE CENTRAL BUSINESS DISTRICT SHALL CONFORM TO THE SPECIFICATIONS ON THIS SHEET UNLESS OTHERWISE APPROVED IN WRITING BY METRO PUBLIC WORKS.

ALL SIDEWALKS SHALL BE 5 INCHES THICK. THE MINIMUM WIDTH OF THE SIDEWALK SHALL BE FIVE (5) FEET. THE CONCRETE USED SHALL BE CLASS "A" REINFORCED (3,500 PSI) WITH WOOD FLOAT FINISH. AN APPROVED TYPE OF LIQUID COMPOUND WILL BE PERMITTED.

THE CONCRETE MIX DESIGN SHALL ALLOW FOR: A) A RANGE OF 5 TO 7 PERCENT ENTRAINED AIR AT THE JOB SITE; B) A WATER CEMENT RATIO IN THE RANGE OF 0.48 TO 0.50; AND C) A SLUMP AT THE JOB SITE IN THE RANGE OF 2 TO 4 INCHES.

NO ADMIXTURES (EXCEPT IN AIR ENTRAINING) SHOULD BE USED WITHOUT SPECIFIC APPROVAL FROM METRO PUBLIC WORKS. NO WATER SHOULD BE ADDED TO THE MIX ONCE IT LEAVES THE CONCRETE PLANT.

THE BLOCKS SHALL BE SCORED IN 18" X 24" RUNNING BOND PATTERN. THE SCORING SHALL BE NO MORE THAN 3/16" WIDE AND AT LEAST 1/2" DEEP. IN ADDITION:

1. A CONTINUOUS STRAIGHT LONGITUDINAL CONTROL (CONTRACTION) JOINT EITHER SAWED (PREFERABLE) OR HAND GROOVED, SHALL BE INSTALLED ALONG THE CENTER OF THE WALK - TO MATCH THE SCORING OF THE ALTERNATE BLOCKS - TO A MAXIMUM WIDTH OF 1/4" AND A MINIMUM DEPTH OF 1-18", WHENEVER THE SIDEWALK POUR IS GREATER THAN 9 FEET WIDE.

2. TRANSVERSE CONTROL JOINTS SHALL BE AT EVERY SIXTH BLOCK (9 FEET APART) AND THE SAME SIZE AS THE LONGITUDINAL CONTROL JOINTS.

3. EXPANSION JOINTS SHALL BE APPROVED NON-EXTRUDING PREFORMED STRIPS 1/2" WIDE, EXTEND FULL DEPTH OF THE WALK AND BE PROVIDED AT FOLLOWING LOCATIONS:
   A) PARALLEL TO THE LINE OF WALK AT BACK OF CURB AND AGAINST THE BUILDING FOR FULL WIDTH WALKS
   B) AT DRIVEWAYS, ON BOTH SIDES AGAINST THE SIDEWALK
   C) AROUND FIXED OBJECTS SUCH AS LIGHT POLES, FIRE HYDRANTS, ETC., ABUTTING OR WITHIN THE SIDEWALK AREA
4. IN THE AREA OF MANHOLES, CATCH BASINS, SMALL FOUNDATIONS, OR OTHER BUILT IN STRUCTURES, JOINTS SHALL BE LAID OUT AS TO MEET THE CORNERS OF THE STRUCTURES, TO THE GREATEST EXTENT POSSIBLE.
5. CONTROL JOINTS SHALL BE SAWED AS SOON AS POSSIBLE WITHOUT RAVELING THE NEW CONCRETE.
6. IN AREAS WHERE BASEMENTS OR VAULTS EXIST UNDER THE SIDEWALK, THE CONTRACTOR SHALL SUBMIT, FOR APPROVAL, DRAWINGS (PREFERABLY SIGNED BY A REGISTERED ENGINEER) THAT DETAIL THE DESIGN AND METHOD OF CONSTRUCTION.

LOUISVILLE METRO PUBLIC WORKS
444 5th Street, Louisville, Kentucky 40202

SIDEWALK FOR CENTRAL BUSINESS DISTRICT

REVISIONS

Mark W. Adams 6/2/06
APPROVED BY: DATE

STANDARD DRAWING NO. 702

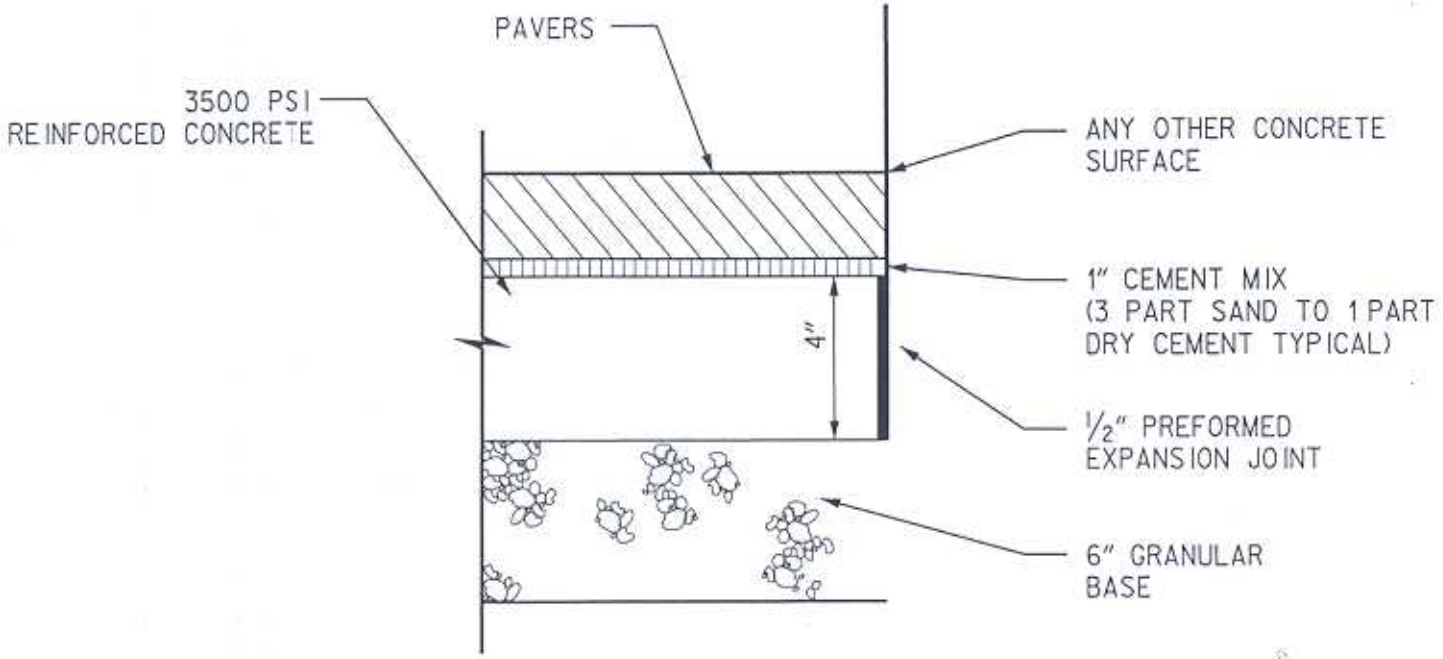

PLACE PAVER ON ROLLED 1"(+)
THICK 7% CEMENT MIX
SETTING BED AND NEOPRENE TACK COAT.
PAVER SHALL BE GAUGED TO ZERO TOLERANCE
WITH 1/16" HAND TIGHT SAND-FILLED JOINTS.
INSTALL IN ACCORDANCE WITH MANUFACTURER'S
WRITTEN INSTRUCTIONS. PAVER TYPE AND COLOR TO BE
SPECIFIED BY ARCHITECT/ENGINEER.

LOUISVILLE METRO PUBLIC WORKS
444 5th Street, Louisville, Kentucky 40202

SIDEWALK PAVER DETAIL	REVISIONS
Mark W. Adams 6/2/06	STANDARD DRAWING NO. 703
APPROVED BY: DATE	

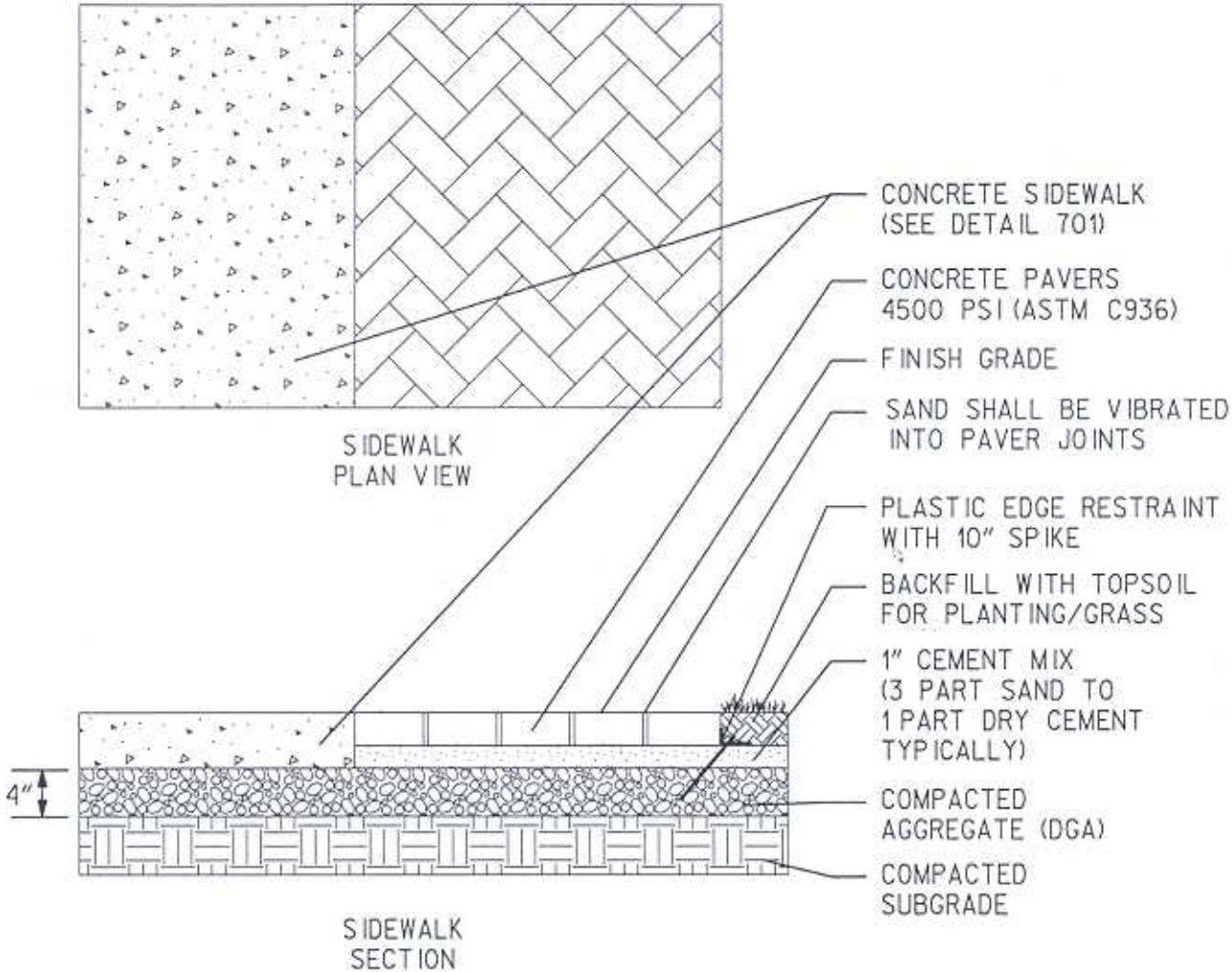

LOUISVILLE METRO PUBLIC WORKS
444 5th Street, Louisville, Kentucky 40202

CONCRETE PAVER DETAIL - AGGREGATE BASE	REVISIONS
Mark W Adams 6/2/06	STANDARD DRAWING NO. 704
APPROVED BY: DATE	

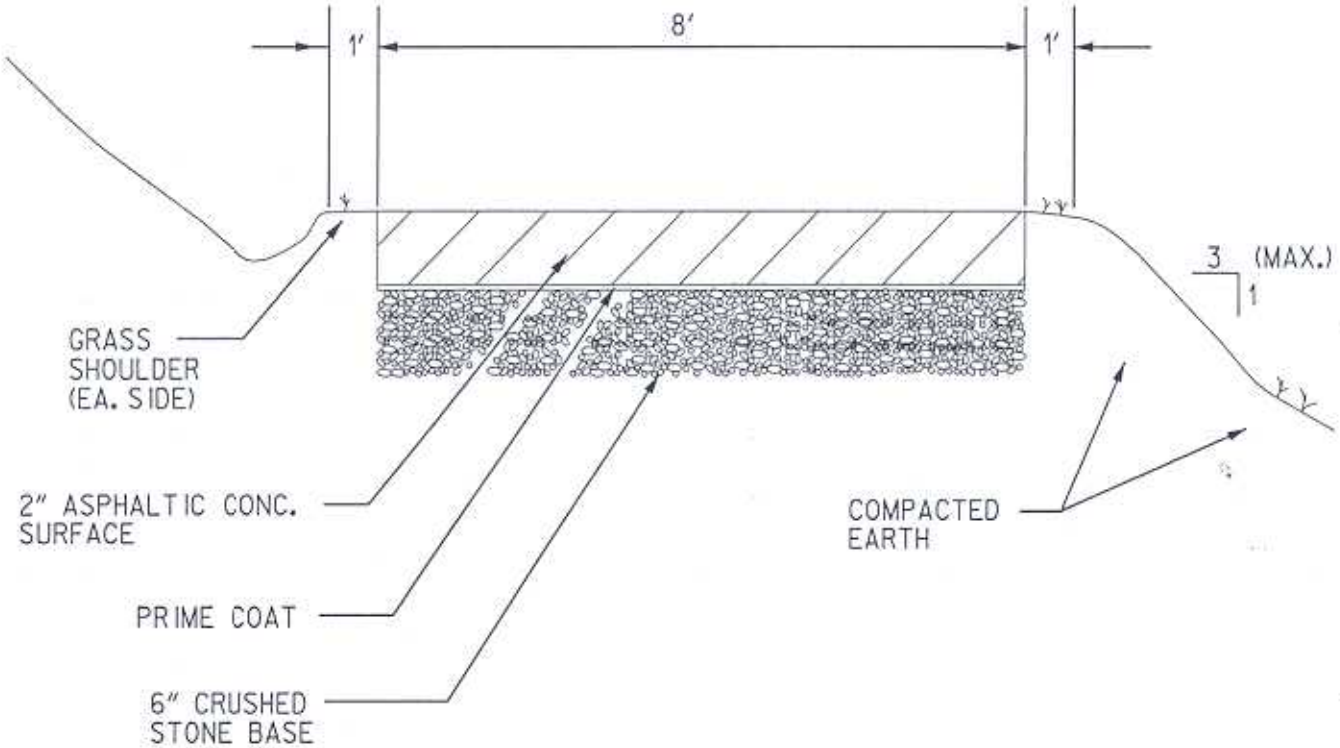

LOUISVILLE METRO PUBLIC WORKS
444 5th Street, Louisville, Kentucky 40202

BIKE PATH PAVEMENT SECTION

REVISIONS

APPROVED BY: Mark W. Adams DATE 4/2/06

STANDARD DRAWING NO. 705